APPROVED
The Plans amended in ....
As per the conditions Mentioned in the accompaining commencement Certificate No. A1|13P/42 dated 30|6|2022
Executive Engineer TOWN PLANING
Nashik Municipal Corporation Nashik

FORM OF STATEMENT 3 [SR. NO. 9 (G)]
AREA DETAILS OF APARTMENT (COMMERCIAL)

FLOOR NAME	OFFICE/SHOP NO	CARPET AREA OF APARTMENT (SHOP/OFFICE)	CARPET AREA OF MEZZANINE (SHOP/OFFICE)	AREA OF BALCONY ATTACHED TO SHOP/OFFICE	AREA OF DOUBLE HEIGHT TERRACES ATTACHED	TOTAL	UNIT	TOTAL AREA OF SHOP/OFFICE
LOWER GROUND + UPPER GROUND FLOOR CARPET AREA	SHOP - 1	90.91	68.18	0.00	0.00	159.09	1	159.09
	SHOP - 2	60.23	45.17	0.00	0.00	105.40	1	105.40
	SHOP - 3	74.73	56.05	0.00	0.00	130.78	1	130.78
	SHOP - 4	80.77	60.58	0.00	0.00	141.35	1	141.35
CARPET AREA FOR LOWER GROUND + UPPPER GROUND FLOOR		306.64	229.98	0.00	0.00	536.62	4.00	536.62
UPPER GROUND + MEZZANINE FLOOR CARPET AREA	SHOP - 1	186.84	140.13	0.00	0.00	326.97	1	326.97
	SHOP - 2	186.84	140.13	0.00	0.00	326.97	1	326.97
	SHOP - 3	140.12	105.09	0.00	0.00	245.21	1	245.21
	SHOP - 3A	47.58	35.69	0.00	0.00	83.27	1	83.265
	SHOP - 4	179.55	134.66	0.00	0.00	314.21	1	314.21
	SHOP - 5	179.55	134.66	0.00	0.00	314.21	1	314.21
	SHOP - 6	179.55	134.66	0.00	0.00	314.21	1	314.21
	SHOP - 7	179.55	134.66	0.00	0.00	314.21	1	314.21
	SHOP - 8	179.55	134.66	0.00	0.00	314.21	1	314.21
	SHOP - 9	179.55	134.66	0.00	0.00	314.21	1	314.21
CARPET AREA FOR UPPPER GROUND+MEZZANINE FLOOR		1638.68	1229.01	0.00	0.00	2867.69	10.00	2867.69
MEZZANINE FLOOR	OFFICE-1	150.12	0.00	0.00	0.00	150.12	1	150.12
	OFFICE-2	100.85	0.00	0.00	0.00	100.85	1	100.85
	OFFICE-3	53.01	0.00	0.00	0.00	53.01	1	53.01
TOTAL CARPET AREA FOR MEZZANINE		303.98	0	0	0	303.98	3	303.98
1ST FLOOR CARPET AREA	OFFICE-101	169.34	0.00	41.04	0.00	210.38	1	210.38
	OFFICE-102	168.74	0.00	9.64	0.00	178.38	1	178.38
	OFFICE-103	169.35	0.00	41.03	0.00	210.38	1	210.38
	OFFICE-104	41.18	0.00	5.04	0.00	46.22	1	46.22
	OFFICE-105	41.18	0.00	5.04	45.91	92.13	1	92.13
	OFFICE-106	41.18	0.00	5.04	45.91	92.13	1	92.13
	OFFICE-107	41.18	0.00	5.04	0.00	46.22	1	46.22
	OFFICE-108	41.18	0.00	5.04	0.00	46.22	1	46.22
	OFFICE-109	41.18	0.00	5.04	45.91	92.13	1	92.13
	OFFICE-110	41.18	0.00	5.04	45.91	92.13	1	92.13
	OFFICE-111	41.18	0.00	5.04	0.00	46.22	1	46.22
	OFFICE-112	115.11	0.00	35.01	0.00	150.12	1	150.12
	OFFICE-113	79.87	0.00	20.98	0.00	100.85	1	100.85
	OFFICE-114	46.34	0.00	6.74	0.00	53.08	1	53.08
	OFFICE-115	35.1	0.00	5.04	0.00	40.14	1	40.14
	OFFICE-116	35.1	0.00	5.04	0.00	40.14	1	40.14
	OFFICE-117	35.1	0.00	5.04	0.00	40.14	1	40.14
	OFFICE-118	35.1	0.00	5.04	0.00	40.14	1	40.14
	OFFICE-119	35.1	0.00	5.04	0.00	40.14	1	40.14
	OFFICE-120	35.1	0.00	5.04	0.00	40.14	1	40.14
	OFFICE-121	35.1	0.00	5.04	0.00	40.14	1	40.14
	OFFICE-122	35.1	0.00	5.04	0.00	40.14	1	40.14
	OFFICE-123	35.1	0.00	5.04	0.00	40.14	1	40.14
	OFFICE-124	35.1	0.00	5.04	0.00	40.14	1	40.14
	OFFICE-125	35.1	0.00	5.04	0.00	40.14	1	40.14
	OFFICE-126	35.1	0.00	5.04	0.00	40.14	1	40.14
TOTAL CARPET AREA FOR 1ST FLOOR		1499.39	0.00	255.24	183.64	1938.27	26.00	1938.27
2ND FLOOR CARPET AREA	OFFICE-201	169.34	0.00	41.04	0.00	210.38	1	210.38
	OFFICE-202	168.74	0.00	9.64	0.00	178.38	1	178.38
	OFFICE-203	169.35	0.00	41.03	0.00	210.38	1	210.38
	OFFICE-204	41.18	0.00	5.04	0.00	46.22	1	46.22
	OFFICE-205	41.18	0.00	5.04	0.00	46.22	1	46.22
	OFFICE-206	41.18	0.00	5.04	0.00	46.22	1	46.22
	OFFICE-207	41.18	0.00	5.04	0.00	46.22	1	46.22
	OFFICE-208	41.18	0.00	5.04	0.00	46.22	1	46.22
	OFFICE-209	41.18	0.00	5.04	0.00	46.22	1	46.22
	OFFICE-210	41.18	0.00	5.04	0.00	46.22	1	46.22
	OFFICE-211	41.18	0.00	5.04	0.00	46.22	1	46.22
	OFFICE-212	115.11	0.00	35.01	0.00	150.12	1	150.12
	OFFICE-213	79.87	0.00	20.98	0.00	100.85	1	100.85
	OFFICE-214	46.34	0.00	6.74	0.00	53.08	1	53.08
	OFFICE-215	35.1	0.00	5.04	0.00	40.14	1	40.14
	OFFICE-216	35.1	0.00	5.04	0.00	40.14	1	40.14
	OFFICE-217	35.1	0.00	5.04	0.00	40.14	1	40.14
	OFFICE-218	35.1	0.00	5.04	0.00	40.14	1	40.14
	OFFICE-219	35.1	0.00	5.04	0.00	40.14	1	40.14
	OFFICE-220	35.1	0.00	5.04	0.00	40.14	1	40.14
	OFFICE-221	35.1	0.00	5.04	0.00	40.14	1	40.14
	OFFICE-222	35.1	0.00	5.04	0.00	40.14	1	40.14
	OFFICE-223	35.1	0.00	5.04	0.00	40.14	1	40.14
	OFFICE-224	35.1	0.00	5.04	0.00	40.14	1	40.14
	OFFICE-225	35.1	0.00	5.04	0.00	40.14	1	40.14
	OFFICE-226	35.1	0.00	5.04	0.00	40.14	1	40.14
TOTAL CARPET AREA FOR 2ND FLOOR		1499.39	0.00	255.24	0.00	1754.63	26.00	1754.63
3RD FLOOR CARPET AREA	OFFICE-301	169.34	0.00	41.04	0.00	210.38	1	210.38
	OFFICE-302	168.74	0.00	9.64	0.00	178.38	1	178.38
	OFFICE-303	169.35	0.00	41.03	0.00	210.38	1	210.38
	OFFICE-304	41.18	0.00	5.04	0.00	46.22	1	46.22
	OFFICE-305	41.18	0.00	5.04	0.00	46.22	1	46.22
	OFFICE-306	41.18	0.00	5.04	0.00	46.22	1	46.22
	OFFICE-307	41.18	0.00	5.04	0.00	46.22	1	46.22
	OFFICE-308	41.18	0.00	5.04	0.00	46.22	1	46.22
	OFFICE-309	41.18	0.00	5.04	0.00	46.22	1	46.22
	OFFICE-310	41.18	0.00	5.04	0.00	46.22	1	46.22
	OFFICE-311	41.18	0.00	5.04	0.00	46.22	1	46.22
	OFFICE-312	115.11	0.00	35.01	0.00	150.12	1	150.12
	OFFICE-313	79.87	0.00	20.98	0.00	100.85	1	100.85
	OFFICE-314	46.34	0.00	6.74	0.00	53.08	1	53.08
	OFFICE-315	35.1	0.00	5.04	0.00	40.14	1	40.14
	OFFICE-316	35.1	0.00	5.04	0.00	40.14	1	40.14
	OFFICE-317	35.1	0.00	5.04	0.00	40.14	1	40.14
	OFFICE-318	35.1	0.00	5.04	0.00	40.14	1	40.14
	OFFICE-319	35.1	0.00	5.04	17.43	57.57	1	57.57
	OFFICE-320	35.1	0.00	5.04	17.43	57.57	1	57.57
	OFFICE-321	35.1	0.00	5.04	17.43	57.57	1	57.57
	OFFICE-322	35.1	0.00	5.04	17.43	57.57	1	57.57
	OFFICE-323	35.1	0.00	5.04	0.00	40.14	1	40.14
	OFFICE-324	35.1	0.00	5.04	0.00	40.14	1	40.14
	OFFICE-325	35.1	0.00	5.04	0.00	40.14	1	40.14
	OFFICE-326	35.1	0.00	5.04	0.00	40.14	1	40.14
TOTAL CARPET AREA FOR 3RDFLOOR		1499.39	0.00	255.24	69.72	1824.36	26.00	1824.36
4TH & 6TH FLOOR CARPET AREA	OFFICE-401 , 601	169.34	0.00	41.04	0.00	210.38	1	210.38
	OFFICE-402 , 602	168.74	0.00	9.64	0.00	178.38	1	178.38
	OFFICE-403 , 603	169.35	0.00	41.03	0.00	210.38	1	210.38
	OFFICE-404 , 604	41.18	0.00	5.04	0.00	46.22	1	46.22
	OFFICE-405 , 605	41.18	0.00	5.04	0.00	46.22	1	46.22
	OFFICE-406 , 606	41.18	0.00	5.04	0.00	46.22	1	46.22
	OFFICE-407 , 607	41.18	0.00	5.04	0.00	46.22	1	46.22
	OFFICE-408 , 608	41.18	0.00	5.04	0.00	46.22	1	46.22
	OFFICE-409 , 609	41.18	0.00	5.04	0.00	46.22	1	46.22
	OFFICE-410 , 610	41.18	0.00	5.04	0.00	46.22	1	46.22
	OFFICE-411 , 611	41.18	0.00	5.04	0.00	46.22	1	46.22
	OFFICE-412 , 612	115.11	0.00	35.01	0.00	150.12	1	150.12
	OFFICE-413 , 613	79.87	0.00	20.98	0.00	100.85	1	100.85
	OFFICE-414 , 614	46.34	0.00	6.74	0.00	53.08	1	53.08
	OFFICE-415 , 615	35.1	0.00	5.04	0.00	40.14	1	40.14
	OFFICE-416 , 616	35.1	0.00	5.04	0.00	40.14	1	40.14
	OFFICE-417 , 617	35.1	0.00	5.04	0.00	40.14	1	40.14
	OFFICE-418 , 618	35.1	0.00	5.04	0.00	40.14	1	40.14
	OFFICE-419 , 619	35.1	0.00	5.04	0.00	40.14	1	40.14
	OFFICE-420 , 620	35.1	0.00	5.04	0.00	40.14	1	40.14
	OFFICE-421 , 621	35.1	0.00	5.04	0.00	40.14	1	40.14
	OFFICE-422 , 622	35.1	0.00	5.04	0.00	40.14	1	40.14
	OFFICE-423 , 623	35.1	0.00	5.04	0.00	40.14	1	40.14
	OFFICE-424 , 624	35.1	0.00	5.04	0.00	40.14	1	40.14
	OFFICE-425 , 625	35.1	0.00	5.04	0.00	40.14	1	40.14
	OFFICE-426 , 626	35.1	0.00	5.04	0.00	40.14	1	40.14
TOTAL CARPET AREA FOR 4TH & 6TH FLOOR EACH		1499.39	0.00	255.24	0.00	1754.63	26.00	1754.63
TOTAL CARPET AREA FOR 4TH & 6TH FLOOR		2998.78	0.00	510.48	0.00	3509.26	52.00	3509.26
5TH FLOOR CARPET AREA	OFFICE-501	169.34	0.00	41.04	0.00	210.38	1	210.38
	OFFICE-502	168.74	0.00	9.64	0.00	178.38	1	178.38
	OFFICE-503	169.35	0.00	41.03	0.00	210.38	1	210.38
	OFFICE-504	41.18	0.00	5.04	0.00	46.22	1	46.22
	OFFICE-505	41.18	0.00	5.04	0.00	46.22	1	46.22
	OFFICE-506	41.18	0.00	5.04	0.00	46.22	1	46.22
	OFFICE-507	41.18	0.00	5.04	0.00	46.22	1	46.22
	OFFICE-508	41.18	0.00	5.04	0.00	46.22	1	46.22
	OFFICE-509	41.18	0.00	5.04	0.00	46.22	1	46.22
	OFFICE-510	41.18	0.00	5.04	0.00	46.22	1	46.22
	OFFICE-511	41.18	0.00	5.04	0.00	46.22	1	46.22
	OFFICE-512	115.11	0.00	35.01	0.00	150.12	1	150.12
	OFFICE-513	79.87	0.00	20.98	0.00	100.85	1	100.85
	OFFICE-514	46.34	0.00	6.74	0.00	53.08	1	53.08
	OFFICE-515	35.1	0.00	5.04	0.00	40.14	1	40.14
	OFFICE-516	35.1	0.00	5.04	0.00	40.14	1	40.14
	OFFICE-517	35.1	0.00	5.04	0.00	40.14	1	40.14
	OFFICE-518	35.1	0.00	5.04	0.00	40.14	1	40.14
	OFFICE-519	35.1	0.00	5.04	0.00	40.14	1	40.14
	OFFICE-520	35.1	0.00	5.04	0.00	40.14	1	40.14
	OFFICE-521	35.1	0.00	5.04	0.00	40.14	1	40.14
	OFFICE-522	35.1	0.00	5.04	0.00	40.14	1	40.14
	OFFICE-523	35.1	0.00	5.04	0.00	40.14	1	40.14
	OFFICE-524	35.1	0.00	5.04	0.00	40.14	1	40.14
	OFFICE-525	35.1	0.00	5.04	0.00	40.14	1	40.14
	OFFICE-526	35.1	0.00	5.04	0.00	40.14	1	40.14
TOTAL CARPET AREA FOR 5TH FLOOR		1499.39	0.00	255.24	0.00	1754.63	26.00	1754.63
7TH FLOOR CARPET AREA	OFFICE-701	169.34	0.00	41.04	0.00	210.38	1	210.38
	OFFICE-702	168.74	0.00	9.64	0.00	178.38	1	178.38
	OFFICE-703	169.35	0.00	41.03	61.11	271.49	1	271.49
	OFFICE-704	41.18	0.00	5.04	0.00	46.22	1	46.22
	OFFICE-705	41.18	0.00	5.04	0.00	46.22	1	46.22
	OFFICE-706	41.18	0.00	5.04	0.00	46.22	1	46.22
	OFFICE-707	41.18	0.00	5.04	0.00	46.22	1	46.22
	OFFICE-708	41.18	0.00	5.04	0.00	46.22	1	46.22
	OFFICE-709	41.18	0.00	5.04	0.00	46.22	1	46.22
	OFFICE-710	41.18	0.00	5.04	0.00	46.22	1	46.22
	OFFICE-711	41.18	0.00	5.04	0.00	46.22	1	46.22
	OFFICE-712	115.11	0.00	35.01	0.00	150.12	1	150.12
	OFFICE-713	79.87	0.00	20.98	0.00	100.85	1	100.85
	OFFICE-714	46.34	0.00	6.74	23.62	76.70	1	76.7
	OFFICE-715	35.1	0.00	5.04	17.82	57.96	1	57.96
	OFFICE-716	35.1	0.00	5.04	17.82	57.96	1	57.96
	OFFICE-717	35.1	0.00	5.04	0.00	40.14	1	40.14
	OFFICE-718	35.1	0.00	5.04	0.00	40.14	1	40.14
	OFFICE-719	35.1	0.00	5.04	0.00	40.14	1	40.14
	OFFICE-720	35.1	0.00	5.04	0.00	40.14	1	40.14
	OFFICE-721	35.1	0.00	5.04	0.00	40.14	1	40.14
	OFFICE-722	35.1	0.00	5.04	0.00	40.14	1	40.14
	OFFICE-723	35.1	0.00	5.04	0.00	40.14	1	40.14
	OFFICE-724	35.1	0.00	5.04	0.00	40.14	1	40.14
	OFFICE-725	35.1	0.00	5.04	0.00	40.14	1	40.14
	OFFICE-726	35.1	0.00	5.04	0.00	40.14	1	40.14
TOTAL CARPET AREA FOR 7TH FLOOR		1499.39	0.00	255.24	120.37	1876.00	26.00	1875.00
8TH FLOOR CARPET AREA	OFFICE-801	169.34	0.00	41.04	0.00	210.38	1	210.38
	OFFICE-802	168.74	0.00	9.64	0.00	178.38	1	178.38
	OFFICE-803	169.35	0.00	41.03	0.00	210.38	1	210.38
	OFFICE-804	41.18	0.00	5.04	0.00	46.22	1	46.22
	OFFICE-805	41.18	0.00	5.04	0.00	46.22	1	46.22
	OFFICE-806	41.18	0.00	5.04	0.00	46.22	1	46.22
	OFFICE-807	41.18	0.00	5.04	0.00	46.22	1	46.22
	OFFICE-808	41.18	0.00	5.04	0.00	46.22	1	46.22
	OFFICE-809	41.18	0.00	5.04	0.00	46.22	1	46.22
	OFFICE-810	41.18	0.00	5.04	0.00	46.22	1	46.22
	OFFICE-811	41.18	0.00	5.04	0.00	46.22	1	46.22
	OFFICE-812	115.11	0.00	35.01	0.00	150.12	1	150.12
	OFFICE-813	79.87	0.00	20.98	0.00	100.85	1	100.85
	OFFICE-814	46.34	0.00	6.74	0.00	53.08	1	53.08
	OFFICE-815	35.1	0.00	5.04	0.00	40.14	1	40.14
	OFFICE-816	35.1	0.00	5.04	0.00	40.14	1	40.14
	OFFICE-817	35.1	0.00	5.04	0.00	40.14	1	40.14
	OFFICE-818	35.1	0.00	5.04	0.00	40.14	1	40.14
	OFFICE-819	35.1	0.00	5.04	0.00	40.14	1	40.14
	OFFICE-820	35.1	0.00	5.04	0.00	40.14	1	40.14
	OFFICE-821	35.1	0.00	5.04	0.00	40.14	1	40.14
	OFFICE-822	35.1	0.00	5.04	0.00	40.14	1	40.14
	OFFICE-823	35.1	0.00	5.04	0.00	40.14	1	40.14
	OFFICE-824	35.1	0.00	5.04	0.00	40.14	1	40.14
	OFFICE-825	35.1	0.00	5.04	0.00	40.14	1	40.14
	OFFICE-826	35.1	0.00	5.04	0.00	40.14	1	40.14
TOTAL CARPET AREA FOR 8TH FLOOR		1499.39	0.00	255.24	0.00	1754.63	26.00	1754.63
9TH, 10TH & 11TH FLOOR CARPET AREA	901, 1001, 1101	41.18	0.00	5.04	0.00	46.22	1	46.22
	902, 1002, 1102	41.18	0.00	5.04	0.00	46.22	1	46.22
	903, 1003, 1103	41.18	0.00	5.04	0.00	46.22	1	46.22
	904, 1004, 1104	41.18	0.00	5.04	0.00	46.22	1	46.22
	905, 1005, 1105	41.18	0.00	5.04	0.00	46.22	1	46.22
	906, 1006, 1106	41.18	0.00	5.04	0.00	46.22	1	46.22
	907, 1007, 1107	41.18	0.00	5.04	0.00	46.22	1	46.22
	908, 1008, 1108	41.18	0.00	5.04	0.00	46.22	1	46.22
	909, 1009, 1109	35.1	0.00	5.04	0.00	40.14	1	40.14
	910, 1010, 1110	35.1	0.00	5.04	0.00	40.14	1	40.14
	911, 1011, 1111	35.1	0.00	5.04	0.00	40.14	1	40.14
	912, 1012, 1112	35.1	0.00	5.04	0.00	40.14	1	40.14
	913, 1013, 1113	35.1	0.00	5.04	0.00	40.14	1	40.14
	914, 1014, 1114	35.1	0.00	5.04	0.00	40.14	1	40.14
	915, 1015, 1115	35.1	0.00	5.04	0.00	40.14	1	40.14
	916, 1016, 1116	35.1	0.00	5.04	0.00	40.14	1	40.14
	917, 1017, 1117	35.1	0.00	5.04	0.00	40.14	1	40.14
	918, 1018, 1118	35.1	0.00	5.04	0.00	40.14	1	40.14
	919, 1019, 1119	35.1	0.00	5.04	0.00	40.14	1	40.14
	920, 1020, 1120	35.1	0.00	5.04	0.00	40.14	1	40.14
TOTAL CARPET AREA FOR 9TH ,10TH & 11TH FLOOR EACH		780.64	0.00	100.80	0.00	881.44	20.00	881.44
TOTAL CARPET AREA OF 9TH , 10TH & 11TH FLOOR		2281.92	0.00	302.40	0.00	2584.32	60.00	2584.32
12TH FLOOR CARPET AREA	OFFICE - 1201	41.18	0.00	5.04	0.00	46.22	1	46.22
	OFFICE - 1202	41.18	0.00	5.04	0.00	46.22	1	46.22
	OFFICE - 1203	41.18	0.00	5.04	0.00	46.22	1	46.22
	OFFICE - 1204	41.18	0.00	5.04	0.00	46.22	1	46.22
	OFFICE - 1205	41.18	0.00	5.04	0.00	46.22	1	46.22
	OFFICE - 1206	41.18	0.00	5.04	0.00	46.22	1	46.22
	OFFICE - 1207	41.18	0.00	5.04	0.00	46.22	1	46.22
	OFFICE - 1208	41.18	0.00	5.04	0.00	46.22	1	46.22
	OFFICE - 1209	35.1	0.00	5.04	0.00	40.14	1	40.14
	OFFICE - 1210	35.1	0.00	5.04	0.00	40.14	1	40.14
	OFFICE - 1211	35.1	0.00	5.04	0.00	40.14	1	40.14
	OFFICE - 1212	35.1	0.00	5.04	0.00	40.14	1	40.14
	OFFICE - 1213	35.1	0.00	5.04	0.00	40.14	1	40.14
	OFFICE - 1214	35.1	0.00	5.04	0.00	40.14	1	40.14
	OFFICE - 1215	35.1	0.00	5.04	0.00	40.14	1	40.14
	OFFICE - 1216	35.1	0.00	5.04	0.00	40.14	1	40.14
	OFFICE - 1217	35.1	0.00	5.04	0.00	40.14	1	40.14
	OFFICE - 1218	35.1	0.00	5.04	0.00	40.14	1	40.14
	OFFICE - 1219	35.1	0.00	5.04	0.00	40.14	1	40.14
	OFFICE - 1220	35.1	0.00	5.04	0.00	40.14	1	40.14
TOTAL CARPET AREA FOR 12TH FLOOR		780.64	0.00	100.80	0.00	881.44	20.00	881.44

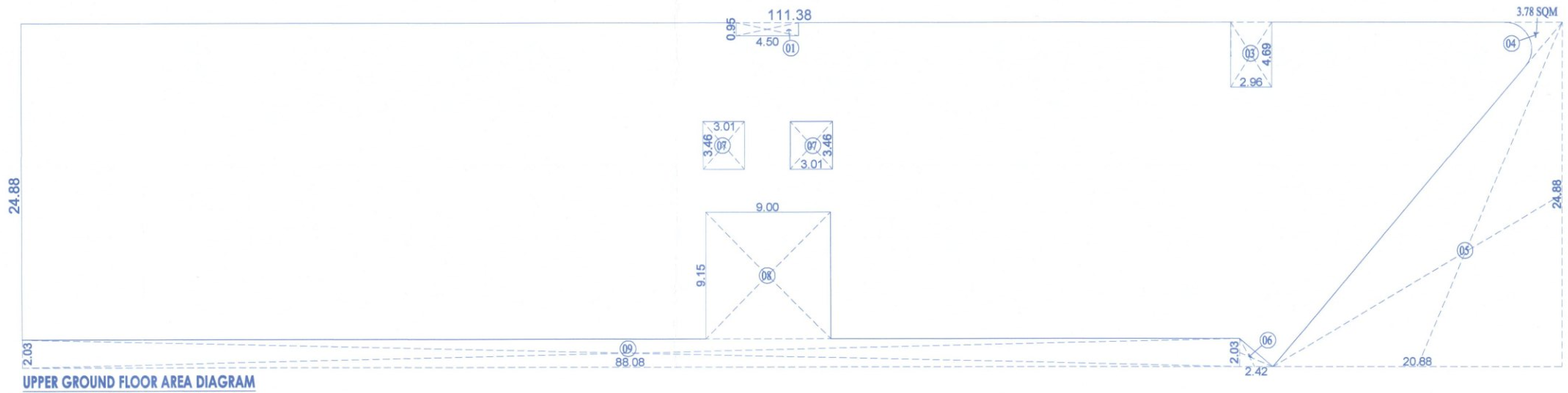

UPPER GROUND FLOOR AREA DIAGRAM
SCALE (1:200)

UPPER GROUND FLOOR AREA OF BLOCK

	A	X	B	UNIT		TOTAL
A	111.38	X	24.88		=	2771.13
	TOTAL					2771.13
			DEDUCTION			
1	4.50	X	0.95	1	=	4.28
3	2.96	X	4.69	1	=	13.88
4					=	3.78
5	20.88	X	24.88	0.5	=	259.75
6	2.42	X	2.03	0.5	=	2.46
7	3.01	X	3.46	2	=	20.83
8	9.00	X	9.15	1	=	82.35
9	88.08	X	2.03	1	=	178.80
	TOTAL				=	566.12
	2771.13	-	566.12		=	2205.01
	UPPER GROUND FLOOR			1	=	2205.01

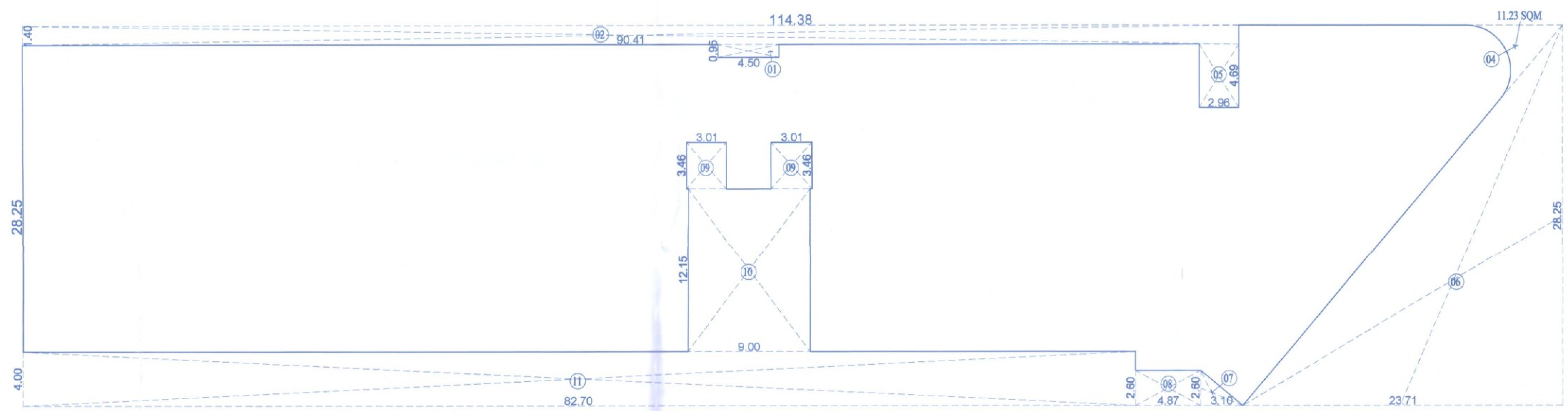

MEZZANINE FLOOR AREA DIAGRAM
SCALE (1:200)

MEZZANINE FLOOR AREA OF BLOCK

	A	X	B	UNIT		TOTAL
A	114.38	X	28.25		=	3231.24
	TOTAL					3231.24
			DEDUCTION			
1	4.50	X	0.95	1	=	4.28
2	90.41	X	1.40	1	=	126.57
4					=	11.23
5	2.96	X	4.69	1	=	13.88
6	23.71	X	28.25	0.5	=	334.90
7	3.10	X	2.60	0.5	=	4.03
8	4.87	X	2.60	1	=	12.66
9	3.01	X	3.46	2	=	20.83
10	9.00	X	12.15	1	=	109.35
11	82.70	X	4.00	1	=	330.80
	TOTAL				=	968.54
	3231.24	-	968.54		=	2262.70
	MEZZANINE GROUND FLOOR			1	=	2262.70

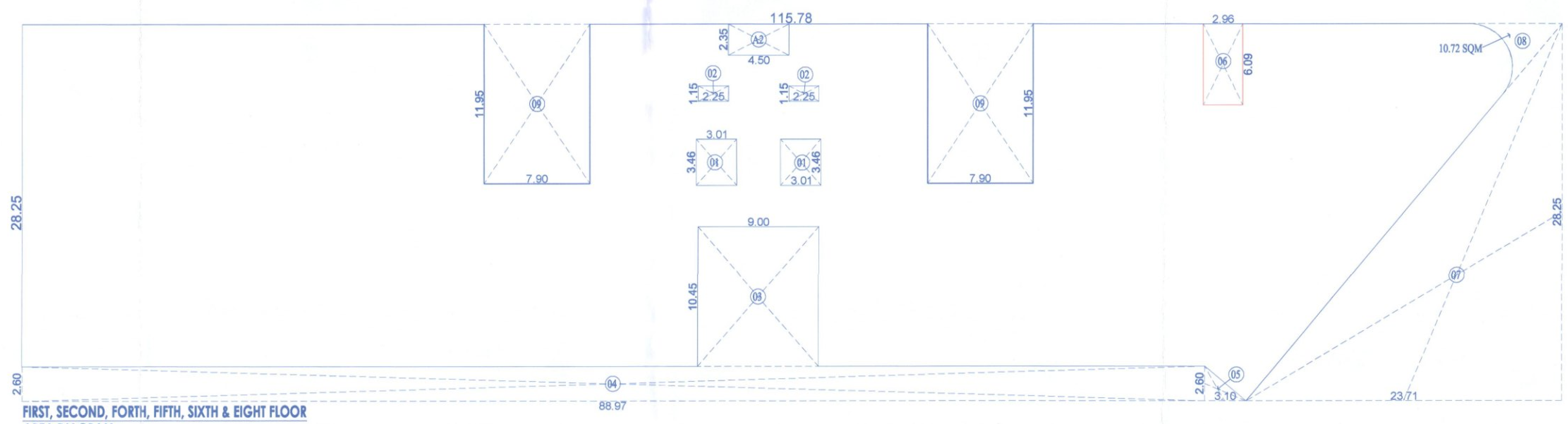

FIRST, SECOND, FORTH, FIFTH, SIXTH & EIGHT FLOOR AREA DIAGRAM
SCALE (1:200)

FIRST,SECOND, FOURTH, FIFTH, SIXTH & EIGHT FLOOR AREA OF BLOCK

	A	X	B	UNIT		TOTAL
A	115.78	X	28.25		=	3270.79
	TOTAL					3270.79
			DEDUCTION			
1	3.01	X	3.46	2	=	20.83
2	2.25	X	1.15	2	=	5.17
A2	4.50	X	2.35	1	=	10.58
3	9.00	X	10.45	1	=	94.05
4	88.97	X	2.60	1	=	231.32
5	3.10	X	2.60	0.5	=	4.03
6	2.96	X	6.09	1	=	18.03
8					=	10.7200
7	23.71	X	28.25	0.5	=	334.90
9	7.90	X	11.95	2	=	188.81
	TOTAL				=	918.44
	3270.79	-	918.44		=	2352.34
	FIRST,SECOND, FOURTH, FIFTH, SIXTH & EIGHT FLOOR			5	=	11761.72

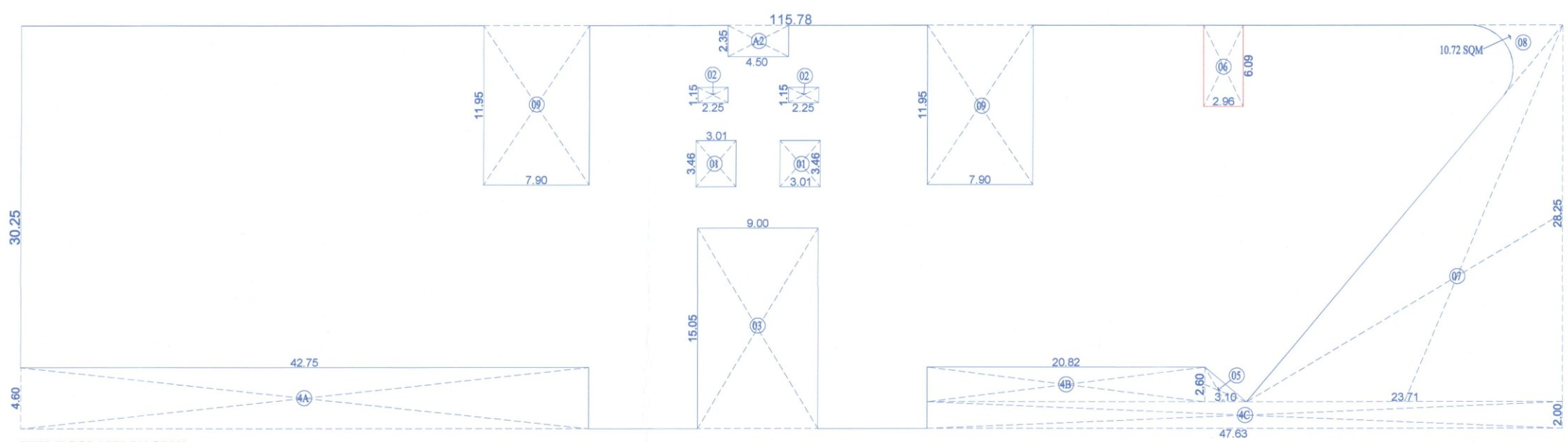

THIRD FLOOR AREA DIAGRAM
SCALE (1:200)

THIRD FLOOR AREA OF BLOCK

	A	X	B	UNIT		TOTAL
A	115.78	X	30.25		=	3502.35
	TOTAL					3502.35
			DEDUCTION			
1	3.01	X	3.46	2	=	20.83
2	2.25	X	1.15	2	=	5.17
A2	4.50	X	2.35	1	=	10.58
3	9.00	X	15.05	1	=	135.45
4A	42.75	X	4.60	1	=	196.65
4B	20.82	X	2.60	1	=	54.13
4C	47.63	X	2.00	1	=	95.26
5	3.10	X	2.60	0.5	=	4.03
6	2.96	X	6.09	1	=	18.03
8					=	10.7200
7	23.71	X	28.25	0.5	=	334.90
9	7.90	X	11.95	2	=	188.81
	TOTAL				=	1074.56
	3502.35	-	1074.56		=	2427.78
	THIRD FLOOR			1	=	2427.78

OWNER
FOR DEEPAK BUILDERS AND DEVELOPERS THROUGH PROP.
SHRI DEEPAK KALYANJI CHANDE

(Dhiraj T. Walunj)
ARCH - CA/2005/36699
Authorised Signatory
ARCHITECT
DHIRAJ WALUNJ
Reg. No. CA/2005/36699

STRUCTURAL ENGINEER: OWNER SIGN.

TITLE: **MUNICIPAL DRAWING**

PROPOSED REVISED BUILDING PERMISSION FOR COMMERCIAL BUILDING ON FINAL PLOT NO 82, S. NO. 547/B/2B/3/1+2+3, CTS NO. 7063/1A+7063/1B+7063/1K, AT NASHIK. FOR DEEPAK BUILDERS AND DEVELOPERS THROUGH PROP. **SHRI DEEPAK KALYANJI CHANDE**

NOTE :
UNLESS OTHERWISE SPECIFIED , DIMENSIONS ARE IN METERS WRITTEN DIMENSIONS TO BE FOLLOWED RATHER THAN SCALING THE DRAWING.

DRAWN BY	CHETAN	DWG.NO	177
CHKD. BY	AR. DHIRAJ WALUNJ	SHT.NO	03
DATE	02.06.2022	SCALE	1:100

FILE PATH: Q:\work on\deepak chande (backup comp1)\MUMBAI NAKA\MUN28-06-2022 FINAL MUN28-06-2022.dwg

vastumitras
ARCHITECTS
AR.DHIRAJ WALUNJ
AR.SHITAL WALUNJ
OFFICE NO.308,BUSINESS COURT
GOVIND NAGAR NASHIK-422001.
0253 3259266, 9011436516
email: -vastumitras@gmail.com