DESCRIPTION OF PROPOSAL & PROPERTY 1/1

PROPOSED BUILDING ON PLOT BEARING C.T.S. NO.157 TO 160 TIKKA NO 1 AT - CHENDANI, TAL & DIST - THANE

STAMP OF DATE OF APPROVAL OF PLANS

amended

Plans are approved Subject to conditions Prescribed in Permit No. V.P. No. - S01/0040/14 TMC/TB-DP/TPS/4346/23 Dated 29/03/2023

Deputy Engineer (TDD)

M.U. [signature] 28/3/23 Executive Engineer (TDD)

Thane Municipal Corporation The City of Thane

THE MUNICIPAL CORPORATION OF THE CITY OF THANE — ठाणे महानगर पालिका

सावधान

"मंजूर नकाशानुसार बांधकाम न करणें तसेच विकास नियंत्रण नियमावलीनुसार आवश्यक त्या परवानग्या न घेता बांधकाम वापर करणें, महाराष्ट्र प्रादेशिक व नगर रचना अधिनियमाचे कलम ५२ अनुसार दखलपात्र गुन्हा आहे. त्यासाठी जास्तीत जास्त ३ वर्ष कैद व रु. ५०००/- दंड होऊ शकतो "

TOTAL BUILT UP WITH STAIRCASE, C.B& BAL

BLDG	FLOOR AREA	STAIR.	BAL.	C.B	TOTAL	BLDG. HEIGHT
COMM	----	----	----	----	----	17.25M.
RESI	379.80	71.95	37.50	31.80	521.05	
TOTAL	379.80	71.95	37.50	31.80	521.05	

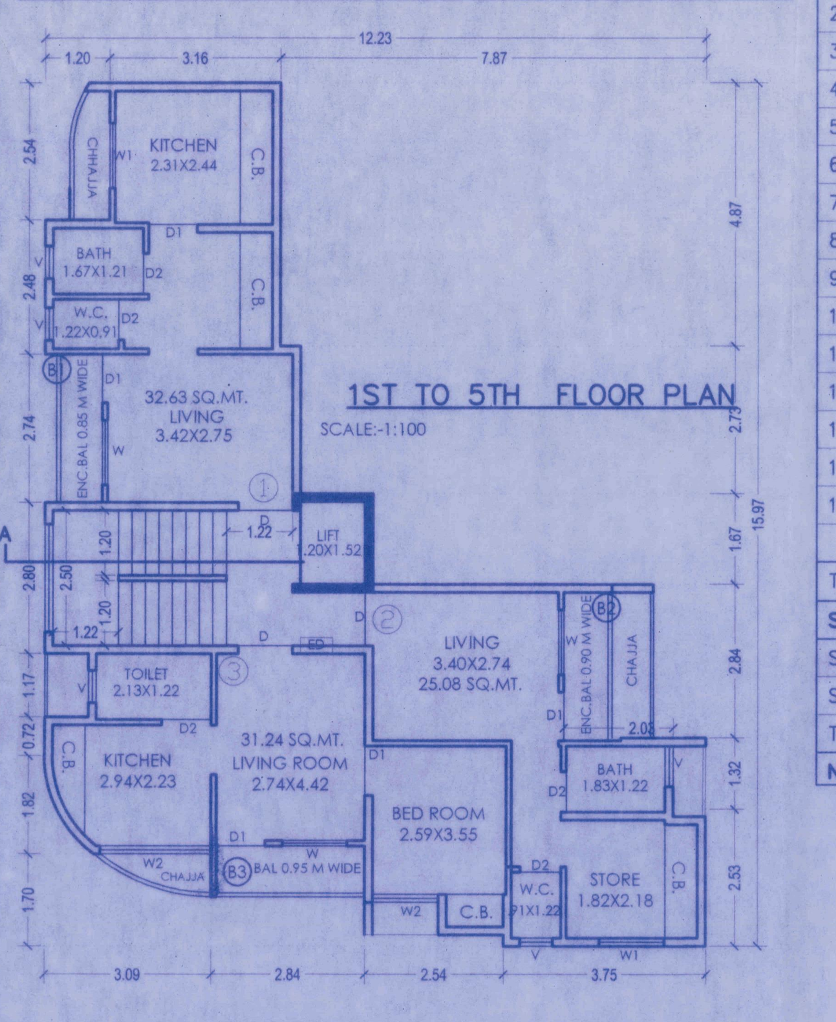

1ST TO 5TH FLOOR PLAN
SCALE:-1:100

BUILT UP AREA CALCULATION (1ST TO 5TH FLOOR)

A	11.62	X	15.97	X	1NO	=	185.57 SQ.MT.	
			TOTAL ADDITION			=	185.57 SQ.MT.	X
DEDUCTIONS								
1	1.20	X	2.54	X	1NO	=	3.06 SQ.MT.	
2	7.86	X	4.87	X	1NO	=	38.29 SQ.MT.	
3	6.88	X	2.73	X	1NO	=	18.79 SQ.MT.	
4	5.53	X	1.67	X	1NO	=	9.25 SQ.MT.	
5	1.06	X	2.89	X	1NO	=	3.07 SQ.MT.	
6	0.96	X	2.84	X	1NO	=	2.73 SQ.MT.	
7	2.54	X	0.81	X	1NO	=	2.06 SQ.MT.	
8	2.74	X	1.85	X	1NO	=	5.07 SQ.MT.	
9	2.27	X	1.70	X	1NO	=	3.86 SQ.MT.	
10	0.92	X	1.70	X	1NO	=	1.56 SQ.MT.	
11	(0.60 + 0.92) /2	X	0.29	X	1NO	=	0.23 SQ.MT.	
12	0.60	X	2.25	X	1NO	=	1.35 SQ.MT.	
13	0.81	X	1.17	X	1NO	=	0.95 SQ.MT.	
14	1.06	X	2.74	X	1NO	=	2.90 SQ.MT.	
15	1.35	X	1.52	X	1NO	=	2.05 SQ.MT.	
			TOTAL DEDUCTION			=	95.22 SQ.MT.	Y1
TOTAL BUILT UP AREA [X - Y1]						=	90.35 SQ.MT.	X1
STAIRCASE AREA								
S1	4.59	X	2.80	X	1NO	=	12.85 SQ.MT.	
S2	1.35	X	1.14	X	1NO	=	1.54 SQ.MT.	
TOTAL STAIR. AREA PER FL.						=	14.39 SQ.MT.	Y2
NET BUILT UP AREA [X1 - Y2]						=	75.96 SQ.MT.	

BALCONY STATEMENT (1ST & 5TH FLOOR)

B1	2.74 X	0.85 X	1 NOS	=	2.33 SQ.MT.
B2	2.74 X	0.90 X	1 NOS	=	2.47 SQ.MT.
B3	2.84 X	0.95 X	1 NOS	=	2.70 SQ.MT.
	TOTAL PER FLOOR			=	7.50 SQ.MT.
PERMISSIBLE BALCONY AREA (75.95X10%)				=	7.59 SQ.MT.
PROPOSED BALCONY AREA				=	7.50 SQ.MT.
EXCESSED BALCONY AREA				=	0.00 SQ.MT.

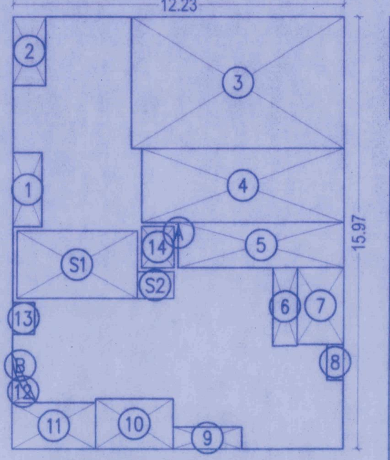

AREA DIA OF 1ST TO 5TH FLOOR PLAN
SCALE= 1:200

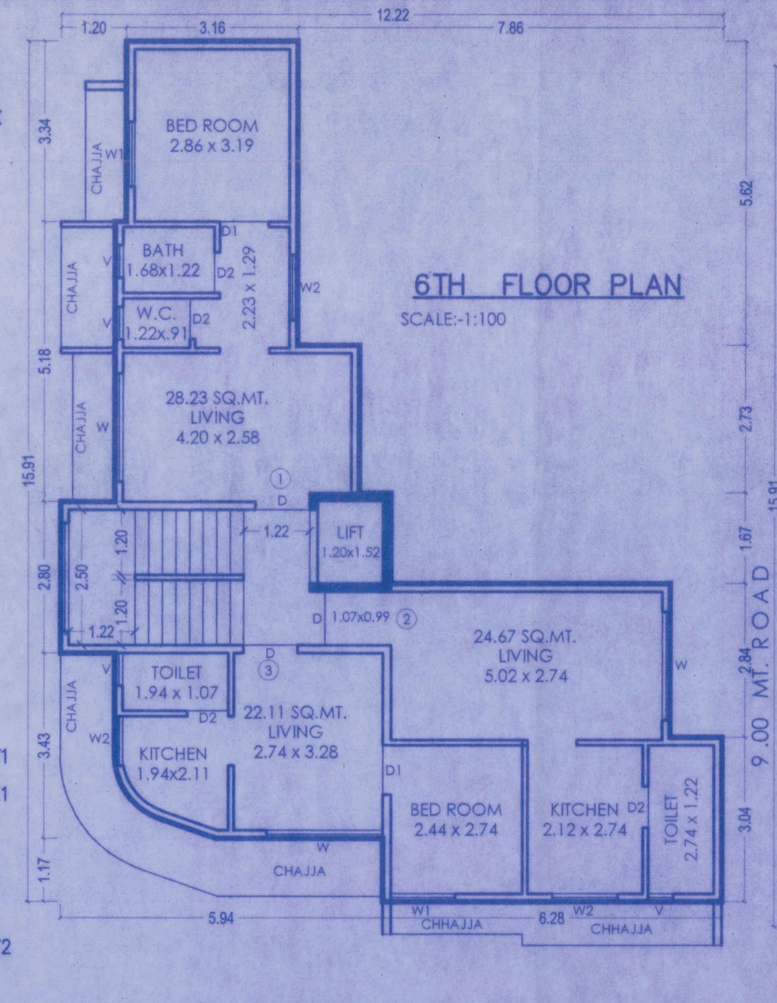

6TH FLOOR PLAN
SCALE:-1:100

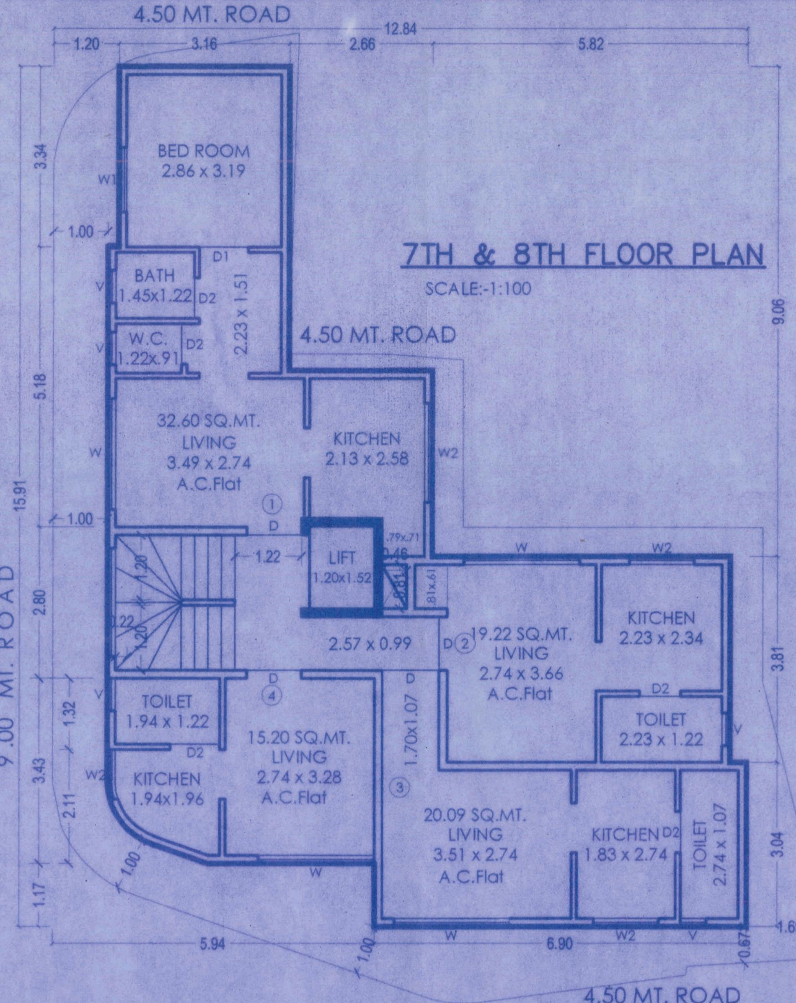

7TH & 8TH FLOOR PLAN
SCALE:-1:100

4.50 MT. ROAD

BUILT UP AREA CALC. 6TH FLOOR

A	12.22	X	15.91	X	1NO	=	194.42 SQ.MT.	
			TOTAL ADDITION			=	194.42 SQ.MT.	X
DEDUCTIONS								
1	1.20	X	3.34	X	1NO	=	4.01 SQ.MT.	
2	7.86	X	5.62	X	1NO	=	44.17 SQ.MT.	
3	6.72	X	2.73	X	1NO	=	18.35 SQ.MT.	
4	6.13	X	1.67	X	1NO	=	10.24 SQ.MT.	
5	0.97	X	2.84	X	1NO	=	2.75 SQ.MT.	
6	5.94	X	1.17	X	1NO	=	6.95 SQ.MT.	
7	1/2 X 1.86	X	0.36	X	1NO	=	0.33 SQ.MT.	
8	1/2 X 1.51	X	0.84	X	1NO	=	0.63 SQ.MT.	
9	1.00	X	3.43	X	1NO	=	3.43 SQ.MT.	
10	1.00	X	5.18	X	1NO	=	5.18 SQ.MT.	
11	1.20	X	1.52	X	1NO	=	1.82 SQ.MT.	LIFT
			TOTAL DEDUCTION			=	97.86 SQ.MT.	
12	2/3 X 1.42	X	0.22	X	1NO	=	0.21 SQ.MT.	
			TOTAL DEDUCTION			=	97.65 SQ.MT.	Y1
TOTAL BUILT UP AREA [X - Y1]						=	96.77 SQ.MT.	X1
BUILT UP AREA AS PER P-LINE						=	98.62 SQ.MT.	
LESS LIFT & DUCT AREA						=	1.82 SQ.MT.	
NET B/UP AREA AS PER P-LINE						=	96.80 SQ.MT.	

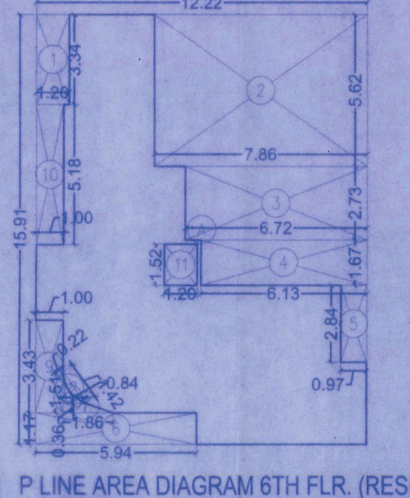

P LINE AREA DIAGRAM 6TH FLR. (RESI.)
SCALE 1:200

BUILT UP AREA CALC. 7TH & 8TH UPPER FLOOR

A	12.84	X	15.91	X	1NO	=	204.28 SQ.MT.	
			TOTAL ADDITION			=	204.28 SQ.MT.	X
DEDUCTIONS								
1	1.20	X	3.34	X	1NO	=	4.01 SQ.MT.	
2	2.66	X	5.62	X	1NO	=	14.95 SQ.MT.	
3	5.82	X	9.06	X	1NO	=	52.73 SQ.MT.	
4	0.31	X	3.81	X	1NO	=	1.18 SQ.MT.	
5	5.94	X	1.17	X	1NO	=	6.95 SQ.MT.	
6	1/2 X 2.86	X	0.36	X	1NO	=	0.51 SQ.MT.	
7	1/3 X 1.51	X	0.84	X	1NO	=	0.42 SQ.MT.	
8	1.00	X	3.43	X	1NO	=	3.43 SQ.MT.	
9	1.00	X	7.98	X	1NO	=	7.98 SQ.MT.	
10	1.20	X	1.52	X	1NO	=	1.82 SQ.MT.	LIFT AREA
11	0.46	X	0.81	X	1NO	=	0.37 SQ.MT.	DUCT AREA
			TOTAL DEDUCTION			=	94.35 SQ.MT.	
12	2/3 X 1.42	X	0.22	X	1NO	=	0.21 SQ.MT.	
			TOTAL DEDUCTION			=	94.14 SQ.MT.	Y1
TOTAL BUILT UP AREA [X - Y1]						=	110.14 SQ.MT.	X1
BUILT UP AREA AS PER P-LINE						=	112.38 SQ.MT.	
LESS LIFT & DUCT AREA						=	2.20 SQ.MT.	
NET B/UP AREA AS PER P-LINE						=	110.18 SQ.MT.	

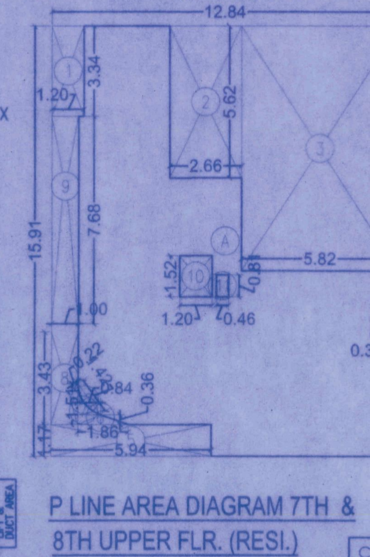

P LINE AREA DIAGRAM 7TH & 8TH UPPER FLR. (RESI.)
SCALE 1:200

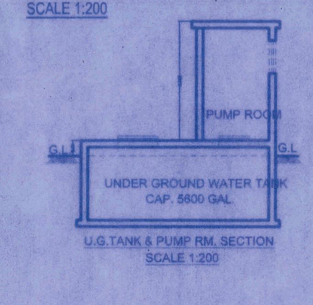

U.G.TANK & PUMP RM. SECTION
SCALE 1:200

C.T.S. 157

AREA UNDER ROAD							C.T.S. 157	
38	1/2	X	0.69	X	0.05	=	0.02 SQ.MT.	
39	1/2	X	3.83	X	1.18	=	2.27 SQ.MT.	
40	1/2	X	4.24	X	0.12	=	0.25 SQ.MT.	
41	1/2	X	1.05	X	0.08	=	0.04 SQ.MT.	
42	1/2	X	0.56	X	0.06	=	0.02 SQ.MT.	
43	1/2	X	0.08	X	0.13	=	0.01 SQ.MT.	
			TOTAL ADDITION			=	2.61 SQ.MT.	X
DEDUCTIONS								
c	2/3	X	1.05	X	0.06	=	0.04 SQ.MT.	
			TOTAL DEDUCTION			=	0.04 SQ.MT.	Y1
TOTAL BUILT UP AREA [X - Y1]						=	2.57 SQ.MT.	X1
NET AREA OF PLOT							C.T.S. 157	
44	1/2	X	3.90	X	0.13	=	0.25 SQ.MT.	
45	1/2	X	6.11	X	2.90	=	8.86 SQ.MT.	
46	1/2	X	6.11	X	0.25	=	0.76 SQ.MT.	
47	1/2	X	5.90	X	0.67	=	1.98 SQ.MT.	
48	1/2	X	8.12	X	2.04	=	8.28 SQ.MT.	
49	1/2	X	3.89	X	0.16	=	0.31 SQ.MT.	
50	1/2	X	5.15	X	1.81	=	4.66 SQ.MT.	
51	1/2	X	3.90	X	0.50	=	0.98 SQ.MT.	
52	1/2	X	3.90	X	1.16	=	2.26 SQ.MT.	
c	2/3	X	1.05	X	0.06	=	0.04 SQ.MT.	
			TOTAL ADDITION			=	28.38 SQ.MT.	
TOTAL AREA OF PLOT C.T.S. 157						=	30.95 SQ.MT.	

C.T.S. 158

AREA UNDER ROAD							C.T.S. 158
29	1/2	X	4.60	X	0.08	=	0.18 SQ.MT.
30	1/2	X	4.74	X	0.90	=	2.14 SQ.MT.
AREA UNDER ROAD						=	2.32 SQ.MT.
NET PLOT AREA							C.T.S. 158
31	1/2	X	5.45	X	3.29	=	8.97 SQ.MT.
32	1/2	X	6.77	X	4.74	=	16.04 SQ.MT.
33	1/2	X	9.79	X	3.74	=	18.31 SQ.MT.
34	1/2	X	4.93	X	3.13	=	7.72 SQ.MT.
35	1/2	X	3.53	X	1.55	=	2.74 SQ.MT.
36	1/2	X	3.32	X	1.76	=	2.92 SQ.MT.
37	1/2	X	2.14	X	0.32	=	0.34 SQ.MT.
			TOTAL ADDITION			=	56.70 SQ.MT. X
TOTAL PLOT AREA C.T.S. 158						=	59.02 SQ.MT.

C.T.S. 159

AREA UNDER ROAD							C.T.S. 159	
1	1/2	X	1.88	X	0.30	=	0.28 SQ.MT.	
2	1/2	X	5.86	X	0.17	=	0.50 SQ.MT.	
3	1/2	X	3.99	X	1.86	=	3.71 SQ.MT.	
4	1/2	X	8.29	X	1.78	=	7.38 SQ.MT.	
5	1/2	X	10.49	X	0.93	=	4.88 SQ.MT.	
6	1/2	X	2.28	X	1.06	=	1.21 SQ.MT.	
7	1/2	X	1.80	X	0.54	=	0.49 SQ.MT.	
8	1/2	X	1.80	X	0.83	=	0.75 SQ.MT.	
			TOTAL ADDITION			=	19.20 SQ.MT.	X
DEDUCTIONS								
a	1/2	X	1.86	X	0.20	=	0.19 SQ.MT.	
b	1/2	X	2.95	X	0.55	=	0.81 SQ.MT.	
			TOTAL DEDUCTION			=	1.00 SQ.MT.	Y1
TOTAL AREA UNDER ROAD						=	18.20 SQ.MT.	X1
NET AREA OF PLOT							C.T.S. 159	
9	1/2	X	9.39	X	1.74	=	8.17 SQ.MT.	
10	1/2	X	9.15	X	2.15	=	9.84 SQ.MT.	
11	1/2	X	11.22	X	2.87	=	16.10 SQ.MT.	
12	1/2	X	5.85	X	0.50	=	1.46 SQ.MT.	
13	1/2	X	7.19	X	1.58	=	5.68 SQ.MT.	
14	1/2	X	6.77	X	0.80	=	2.71 SQ.MT.	
a	1/2	X	1.86	X	0.20	=	0.19 SQ.MT.	
b	1/2	X	2.95	X	0.55	=	0.81 SQ.MT.	
TOTAL NET AREA OF PLOT						=	44.96 SQ.MT.	
TOTAL PLOT AREA C.T.S. 159						=	63.16 SQ.MT.	

C.T.S. 160

AREA UNDER ROAD							C.T.S. 160	
16	1/2	X	1.00	X	0.32	=	0.16 SQ.MT.	
17	1/2	X	2.20	X	0.17	=	0.19 SQ.MT.	
18	1/2	X	6.06	X	1.38	=	4.18 SQ.MT.	
19	1/2	X	6.03	X	1.19	=	3.59 SQ.MT.	
AREA UNDER ROAD						=	8.12 SQ.MT.	
NET AREA OF PLOT							C.T.S. 160	
20	1/2	X	5.85	X	0.85	=	2.49 SQ.MT.	
21	1/2	X	11.33	X	1.17	=	6.63 SQ.MT.	
22	1/2	X	4.46	X	0.96	=	2.14 SQ.MT.	
23	1/2	X	4.78	X	0.38	=	0.91 SQ.MT.	
24	1/2	X	9.03	X	0.98	=	4.42 SQ.MT.	
25	1/2	X	9.03	X	2.50	=	11.29 SQ.MT.	
26	1/2	X	7.92	X	1.06	=	4.20 SQ.MT.	
27	1/2	X	8.17	X	1.61	=	6.58 SQ.MT.	
28	1/2	X	2.50	X	1.84	=	2.30 SQ.MT.	
			TOTAL ADDITION			=	40.96 SQ.MT.	X
TOTAL PLOT AREA C.T.S. 160						=	49.08 SQ.MT.	

C.T.S. NO.	AS PER P.R. CARD	AS PER TRIANG.	AREA TAKEN FOR PROPOSAL	ROAD AREA
C.T.S.NO.157	30.90 SQ.MT.	30.95 SQ.MT.	30.90 SQ.MT.	2.61 SQ.MT.
C.T.S.NO.158	58.50 SQ.MT.	59.02 SQ.MT.	58.50 SQ.MT.	2.32 SQ.MT.
C.T.S.NO.159	56.90 SQ.MT.	63.16 SQ.MT.	56.90 SQ.MT.	19.20 SQ.MT.
C.T.S.NO.160	48.50 SQ.MT.	49.08 SQ.MT.	48.50 SQ.MT.	8.12 SQ.MT.
TOTAL	194.80 SQ.MT.	202.21 SQ.MT.	194.80 SQ.MT.	32.25 SQ.MT.

B/UP AREA SUMMARY (AS PER PLINE)

FLOOR	B/UP AREA (COMM.)	B/UP AREA APPROVED	RESI. PROPOSED
ST/GR. FLR	---	---	69.82 SQ.MT.
1st FLR	---	75.96 SQ.MT.	---
2nd FLR	---	75.96 SQ.MT.	---
3rd FLR	---	75.96 SQ.MT.	---
4th FLR	---	75.96 SQ.MT.	---
5th FLR	---	75.96 SQ.MT.	---
6th FLR	---	---	96.80 SQ.MT.
7TH FLR	---	---	110.18 SQ.MT.
8TH FLR	---	---	110.18 SQ.MT.
TOTAL	---	379.80 SQ.MT.	386.98 SQ.MT.
TOTAL =		379.80 SQ.MT.	386.98 SQ.MT.
COMM. + RESI. =		766.78 SQ.MT.	

FORM OF STATEMENT 2 SR.NO.9(A)PROP. BLDG.

BLDG NO.	FLOOR NO	TOTAL B/UP AREA OF AS PER OUTER CONSTRUCTION LINE.	
(1)	(2)	(3)	
		APPROVED	PROPOSED
1	GR(P)/ST(P)	---	69.82 SQ.MT.
	1st FLOOR	75.96 SQ.MT.	---
	2nd FLOOR	75.96 SQ.MT.	---
	3rd FLOOR	75.96 SQ.MT.	---
	4th FLOOR	75.96 SQ.MT.	---
	5th FLOOR	75.96 SQ.MT.	---
	6th FLOOR	---	96.80 SQ.MT.
	7th FLOOR	---	110.18 SQ.MT.
	8th FLOOR	---	110.18 SQ.MT.
	TOTAL	379.80 SQ.MT.	386.98 SQ.MT.
	TOTAL	766.78 SQ.MT.	

TENEMENT SUMMARY

FLOOR	BELOW 30.00 sqmt.	30-40 SQMT.	40-80 SQMT.	>80 SQMT.
ST/GR. FLR	01	01	--	--
1st FLOOR	--	--	--	--
2nd FLOOR	--	--	--	--
3rd FLOOR	--	--	--	--
4th FLOOR	--	--	--	--
5th FLOOR	--	--	--	--
6th FLOOR	03	01	--	--
7th FLOOR	03	01	--	--
8th FLOOR	03	01	--	--
TOTAL	10	03	--	--
TOTAL	13 NOS			

SCHEDULE OF DOORS & WINDOWS

TYPES	SIZE	DESCRIPTION
D	1.00 X 2.10	T.W. PANELLED DOOR
D1	0.90 X 2.10	T.W. PANELLED DOOR
D2	0.75 X 1.85	T.W. PANELLED DOOR
W	1.50 X 1.20	T.W. GLAZED WINDOW
W1	1.20 X 1.20	T.W. GLAZED WINDOW
W2	0.90 X 1.20	T.W. GLAZED WINDOW
V	0.60 X 0.75	T.W. GLAZED VENTILATOR

AREA STATEMENT

AREA STATEMENT	SQ.MT.
AREA OF PLOT (MINIMUM AREA OF A, B, C TO BE CONSIDERED)	194.80
1. (a) AS PER OWNERSHIP DOCUMENT (7/12, CTS EXTRACT)	194.80
(b) AS PER MEASUREMENT SHEET	195.99
(a) AS PER SITE	195.99
2. DEDUCTIONS FOR	
(a) PROPOSED D.P./ D.P. ROAD WIDENING AREA/ SERVICE ROAD/ HIGHWAY WIDENING	32.25
(b) ANY D.P RESERVATION AREA	---
(c) NOT IN POSSESSION	---
(TOTAL = a + b + c)	32.25
3. BALANCE AREA OF PLOT (1 - 2)	162.55
4. AMENITY SPACE (IF APPLICABLE)	
(a) REQUIRED -	---
(b) ADJUSTMENT OF 2(b), IF ANY -	---
(c) BALANCE PROPOSED -	---
5. NET PLOT AREA [3 - 4 (c)]	162.55
6. RECREATIONAL OPEN SPACE (IF APPLICABLE)	
(a) REQUIRED -	---
(b) PROPOSED -	---
7. INTERNAL ROAD AREA	---
8. PLOTABLE AREA (IF APPLICABLE)	
9. BUILT UP AREA WITH REFERENCE TO BASIC F.S.I. AS PER FRONT ROAD WIDTH (SR. NO. 5x BASIC FSI)= 162.55 x 2.00=325.10	325.10
10. ADDITION OF FSI ON PAYMENT OF PREMIUM	
(a) MAXIMUM PERMISSIBLE PREMIUM FSI - BASED ON ROAD WIDTH / TOD ZONE.	---
(b) PROPOSED FSI ON PAYMENT OF PREMIUM 194.80 X 0.30 = 58.44	38.48
11. IN-SITU FSI / TDR LOADING	
(a) IN-SITU AREA AGAINST D.P. ROAD, [3.0 X SR.NO.2(a)] old scantion = 32.25 x 2 =64.50	[illegible]
(b) IN-SITU AREA AGAINST AMENITY SPACE IF HANDED OVER [2.00 OR 1.85 X SR.NO.4(b) AND/OR (c)]	
(c) TDR AREA 194.80 X 0.30 = 58.44	
(d) TOTAL IN-SITU / TDR LOADING PROPOSED [11 (a)+(b)+(c)]	58.44
12. ADDITIONAL FSI AREA	254.04
13. TOTAL ENTITLEMENT FSI IN THE PROPOSAL	
(a) [9 + 10(b) + 11(d)] OR 12 WHICHEVER IS APPLICABLE	676.06
(b) ANCILLARY AREA FSI UPTO 60% OR 80% WITH PAYMENT OF CHARGES COMM. RESI. 386.98/1.6 x 60%=145.11	91.00
(c) TOTAL ENTITLEMENT (a + b)	767.06
14. MAXIMUM UTILIZATION LIMIT OF FSI (BUILDING POTENTIAL) PERMISSIBLE AS PER ROAD WIDTH {(AS PER REGULATION NO.6.1 OR 6.2 OR 6.3 OR 6.4 AS APPLICABLE) X 1.6 OR 1.8} {(162.55 X 2=325.10)+(194.80X0.3=58.44) +(254.05) + (194.80X0.3=58.44)} X 1.6 = 1113.64	1113.64
15. TOTAL BUILT-UP AREA IN PROPOSAL (EXCLUDING AREA AT SR. NO.17b)	767.06
(a) EXISTING BUILT-UP AREA	379.80
(b) BALANCE BUILT-UP AREA	387.26
(c) PROPOSED BUILT-UP AREA (AS PER 'P-LINE')	386.98
(d) TOTAL (a + c)	766.78
16. FSI CONSUMED (15/13) (SHOULD BE LESS THAN SR.NO.14)	0.99
17. AREA FOR INCLUSIVE HOUSING, IF ANY	
(a) REQUIRED (20% OF SR.NO.5)	N.A.
(b) PROPOSED	N.A.

CERTIFICATE OF AREA

CERTIFICATE OF AREA CERTIFIED THAT THE PLOT UNDER REFERENCE WAS SURVEYED BY ME ON --------- AND THE DIMENSIONS OF SIDES ETC. OF PLOT STATED ON PLAN ARE AS MEASURED ON SITE AND THE AREA SO WORKED OUT TALLIES WITH THE AREA STATED IN DOCUMENT OF OWNERSHIP / T.P. SCHEME RECORDS / LAND RECORDS DEPARTMENT / CITY SURVEY RECORDS.

AR. JITESH PAWAR (CA/2005/36017)

OWNER'S DECLARATION :- I / WE UNDERSIGNED HEREBY CONFIRM THAT I / WE WOULD ABIDE BY PLANS APPROVED BY AUTHORITY/ COLLECTOR. I / WE WOULD EXECUTE THE STRUCTURE AS PER APPROVED PLANS. ALSO I / WE WOULD EXECUTE THE WORK UNDER SUPERVISION OF PROPER TECHNICAL PERSON SO AS TO ENSURE THE QUALITY AND SAFETY AT THE WORK SITE.

MR. SALIM KHAN
M/S. JAI SANTOSHIMATA CONSTRUCTION

MR. ZAHID EKBAL AHMAD

MR. SURESH SAKHARAM DHAKOLIYA
M/S. JAI SANTOSHIMATA CONSTRUCTION

ARCHITECT / LICENSED ENGINEER / SUPERVISOR NAME AND SIGNATURE

JOB NO.	DRAWING NO.	SCALE	JITESH P. PAWAR & ASSOCIATES
23.03.23/20.03.23		AS GIVEN	OFFICE NO 101, SHREE SWAMI SAMARTHA APT., NEAR SWAMI SAMARTHA MATH, MUMBAI PUNA RD, DATTAWADI,KALWA (W) , THANE - 400605
DRAWN BY	CHECKED BY		
NEHA	JITESH PAWAR		PHONE :- M - 99 20 10 05 10 R- 0222 25397207

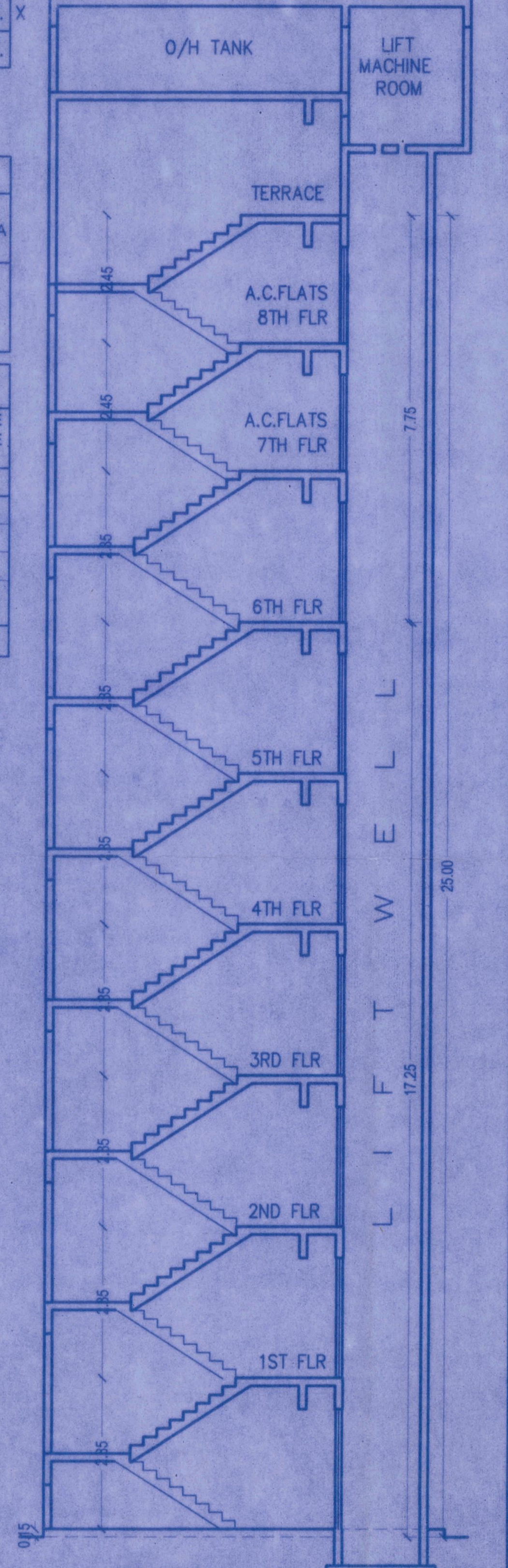

SECTION A–A
SCALE:- 1:100

TOTAL BUILT UP AREA STATEMENT & CONSTRUCTION AREA STATEMENT IN SQ. MT.

BLDG. NO.		NO. OF FLOOR	HEIGHT OF BLDG.	STILT AREA	NET B/UP AREA	TOTAL B/UP AREA (4+5+6)	TOTAL CONSTRUCTION AREA
(1)		(2)	(3)	(4)	(5)	(6)	(7)
BLDG. 1	PROPOSED	6TH-TO-8TH UPPER	25.00	00.00	392.58	392.58	961.07
	APPROVED	ST./GR.+1ST-5TH	17.25	34.59	379.80	414.39	
			STAIRCASE ,C.B & BALC. AREA			154.10	

FORM OF STATEMENT 3 SR.NO.9 (G) AREA DETAILS OF APARTMENT

BLDG. NO.	FLOOR NO.	SHOP/office NO.	APARTMENT NO.	CARPET AREA OF SHOP	CARPET AREA OF APARTMENT	AREA OF BALCONY ATTACHED TO APARTMENT	AREA OF DOUBLE HEIGHT TERRACE TO FLAT
(1)	(2)	(3)	(4)	(5)	(5)	(6)	(7)
1	GROUND	-	2 X 1 = 02	-	51.09 SQ.MT.	-	-
	1ST TO 5TH	-	3 X 5 = 15	-	-	-	-
	6TH	-	3 X 1 = 03	-	75.01 SQ.MT.	-	-
	7TH & 8TH UPPER	-	4 X 2 = 08	-	87.11 X 2 = 174.22 SQ.MT.	-	-
TOTAL		-	28 NOS.	-	300.32 SQ.MT.	-	-

AS PER UDCPR : PARKING STATEMENT FOR PROPOSED FLOORS

AREA IN SQ.MT.	CAR PARKING PROP. REQ. PARK.	CAR PARKING PROP. UNIT	CAR PARKING PARK. REQ.	SCOOTER PARKING PROP. REQ. PARK.	SCOOTER PARKING PROP. UNIT	SCOOTER PARKING PARK. REQ.
i) FOR EVERY TWO TENEMENT WITH EACH TENEMENT HAVING CARPET AREA LESS THAN 30.00 SQ.MT.	NIL	10	00	22	10	10
ii) FOR EVERY TWO TENEMENTS WITH TENEMENT HAVING CARPET AREA LESS THAN 40.00 SQ.M. BUT MORE THAN 30 SQ.M.	2:1	03	1.5	22	03	03
TOTAL RESIDENTIAL PARKING			1.5			13.0
VISITOR 5%			0.075			0.65
TOTAL			1.575			13.65
LOADING			00			00
REQUIRED CAR PARKING			1.575			13.65

PARKING STATEMENT (AS PER OLD DCR AND UDCPR)

	AREA IN SQ.MT.		CAR PARKING		SCOOTER PARKING
A	NEW PERMISSIBLE PARKING		1.575		13.65
B	LESS 20% REDEVELOPMENT FOR NEW REQUIRED		1.26		10.92
C	OLD REQUIRED PARKING		0.00		15.00
D	TOTAL PARKING (B+C)		1.26		25.92
E	REQUIRED PARKING	SAY	1.00	SAY	26.00
	COMPOSITE PARKING	+	1.00	1X6	-06.00 21.00
	PROVIDED PARKING	STILT PARKING	2.0 2.00	STILT PARKING	3 21.00
		OPEN PARKING	0.0	OPEN PARKING	9+9
			2.00		21.00

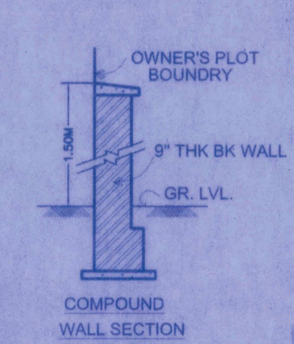

COMPOUND WALL SECTION
SCALE 1:50

CARPET AREA SUMMARY GROUND FLOOR	
FLAT NO.	CARPET AREA
1	19.98 SQ.MT.
2	31.11 SQ.MT.
TOTAL	51.09 SQ.MT.

CARPET AREA SUMMARY 6TH FLOOR	
FLAT NO.	CARPET AREA
1	28.23 SQ.MT.
2	24.67 SQ.MT.
3	22.11 SQ.MT.
TOTAL	75.01 SQ.MT.

CARPET AREA SUMMARY 7TH & 8TH UPP FLR.	
FLAT NO.	CARPET AREA
1	32.60 SQ.MT.
2	19.22 SQ.MT.
3	20.09 SQ.MT.
4	15.20 SQ.MT.
TOTAL	87.11 SQ.MT.

OLD PARKING STATEMENT

PARKING STATEMENT TYPE	AREA IN SQ.MT.	UNIT/ REQ. PARK.	PROP./REQ.	PARK. REQ.
RESIDENTIAL	UP TO 35	NIL	15	NIL
	35 TO 50	2:1	00	00
	50 TO 75	1:1	NIL	00
	ABOVE 75	1:2	NIL	00
OFFICE	50 SQ.MT/50-1	0/50	----	00
TOTAL				00
VISITOR 10%				00
LOADING				00
REQUIRED PARKING				00
PROVIDED PARKING	STILT PARKING	1C		00
SCOOTER REQUIRED				15
SCOOTER PROVIDE	STILT PARKING		00	
	OPEN PARKING		15	

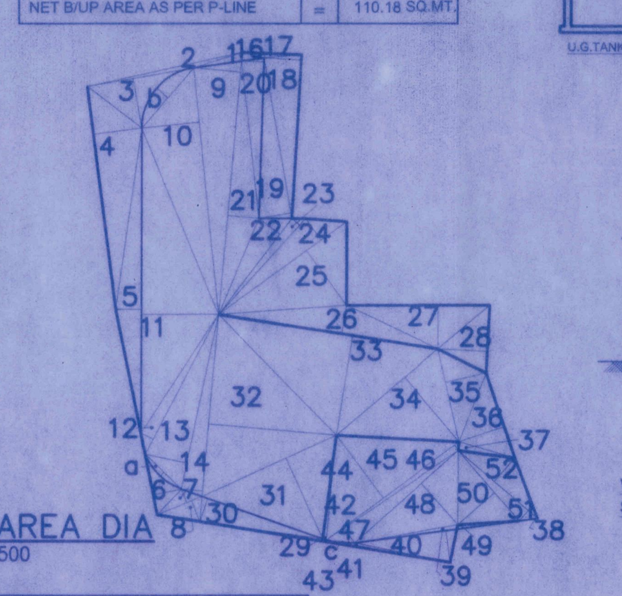

PLOT AREA DIA
SCALE:- 1:500

BUILT UP AREA CALCULATION GR FLOOR

A	6.09	X	16.89	X	1NO		=	102.86 SQ.MT.	
B	2/3	X	1.91	X	0.30	X 1NO	=	0.38 SQ.MT.	
			TOTAL ADDITION				=	103.24 SQ.MT.	X
DEDUCTIONS									
1	0.60	X	9.11	X	1NO		=	5.46 SQ.MT.	
2	1.72	X	6.22	X	1NO		=	10.69 SQ.MT.	
3	1.35	X	2.73	X	1NO		=	3.69 SQ.MT.	
4	1.35	X	0.99	X	1NO		=	1.34 SQ.MT.	
5	1/2	X	6.09	X	1.54	X 1NO	=	4.68 SQ.MT.	
6	1/2	X	3.15	X	1.38	X 1NO	=	2.17 SQ.MT.	
7	1/2	X	3.15	X	0.47	X 1NO	=	0.75 SQ.MT.	
8	1/2	X	0.85	X	0.43	X 1NO	=	0.18 SQ.MT.	
9	0.60	X	1.89	X	1NO		=	1.13 SQ.MT.	
10	1.20	X	1.52	X	1NO		=	1.82 SQ.MT.	
11	1/2	X	1.32	X	0.90	X 1NO	=	0.59 SQ.MT.	
12	1/2	X	4.36	X	0.38	X 1NO	=	0.83 SQ.MT.	
13	2/3	X	1.32	X	0.10	X 1NO	=	0.09 SQ.MT.	
			TOTAL DEDUCTION				=	33.42 SQ.MT.	Y1
TOTAL BUILT UP AREA [X - Y1]							=	69.82 SQ.MT.	X1

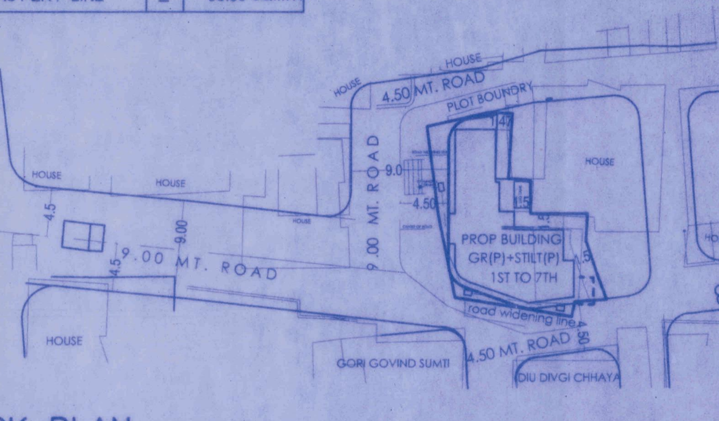

BLOCK PLAN
SCALE:- 1:500

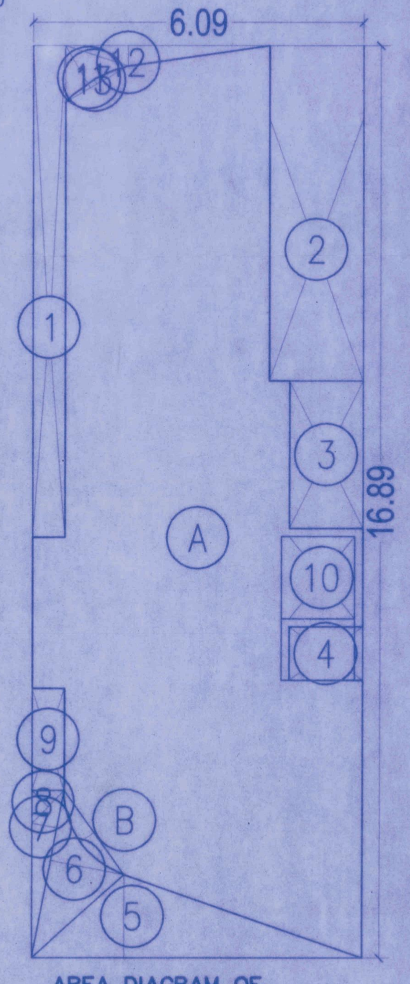

AREA DIAGRAM OF GR FLOOR PLAN
SCALE= 1:100

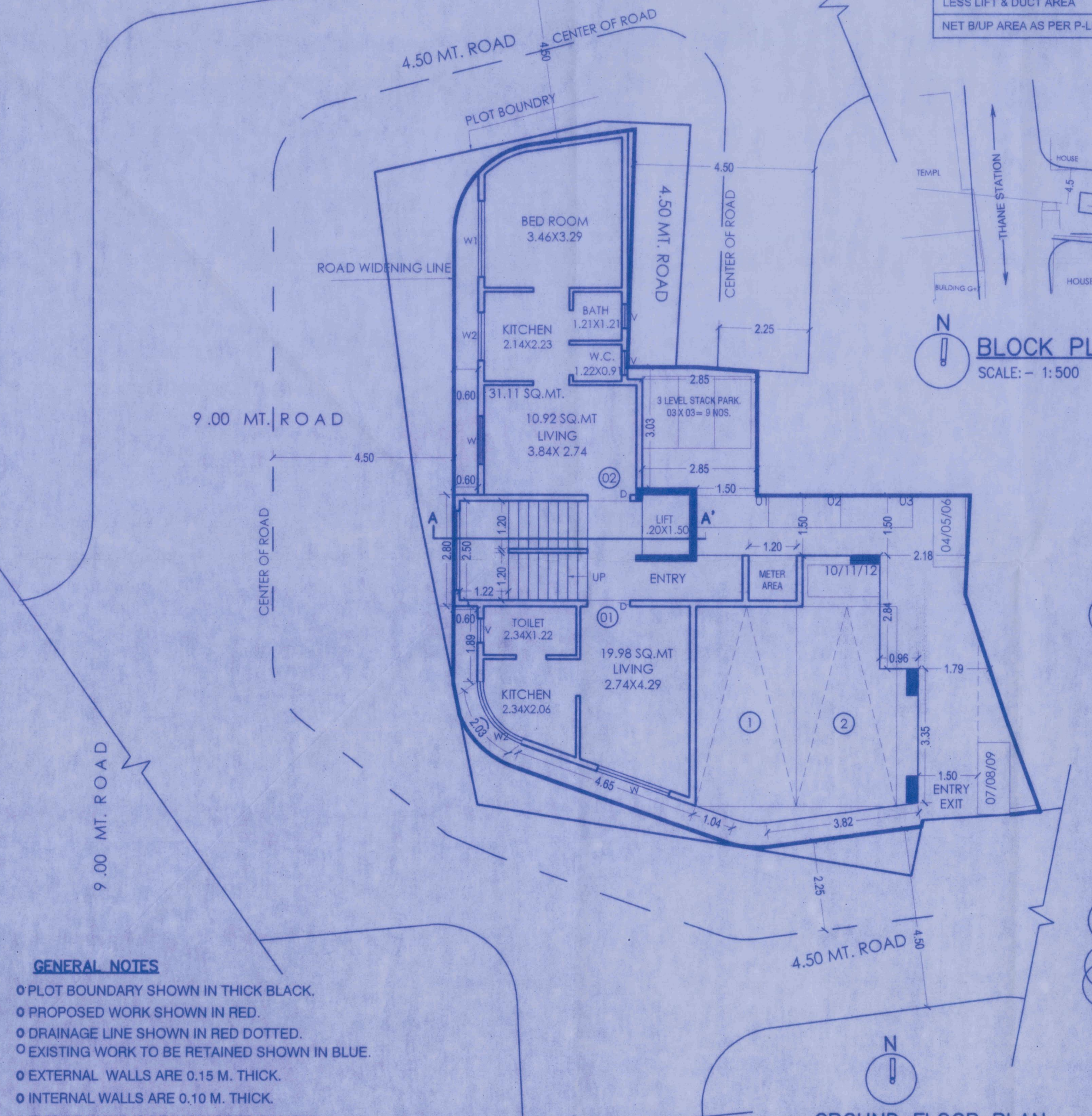

GROUND FLOOR PLAN
SCALE:-1:100

GENERAL NOTES

- PLOT BOUNDARY SHOWN IN THICK BLACK.
- PROPOSED WORK SHOWN IN RED.
- DRAINAGE LINE SHOWN IN RED DOTTED.
- EXISTING WORK TO BE RETAINED SHOWN IN BLUE.
- EXTERNAL WALLS ARE 0.15 M. THICK.
- INTERNAL WALLS ARE 0.10 M. THICK.
- THIS DRAWING IS DRAWN AS PER OWNER'S SUGGESTION AND APPROVAL.