WING-A
SHEET-3/5

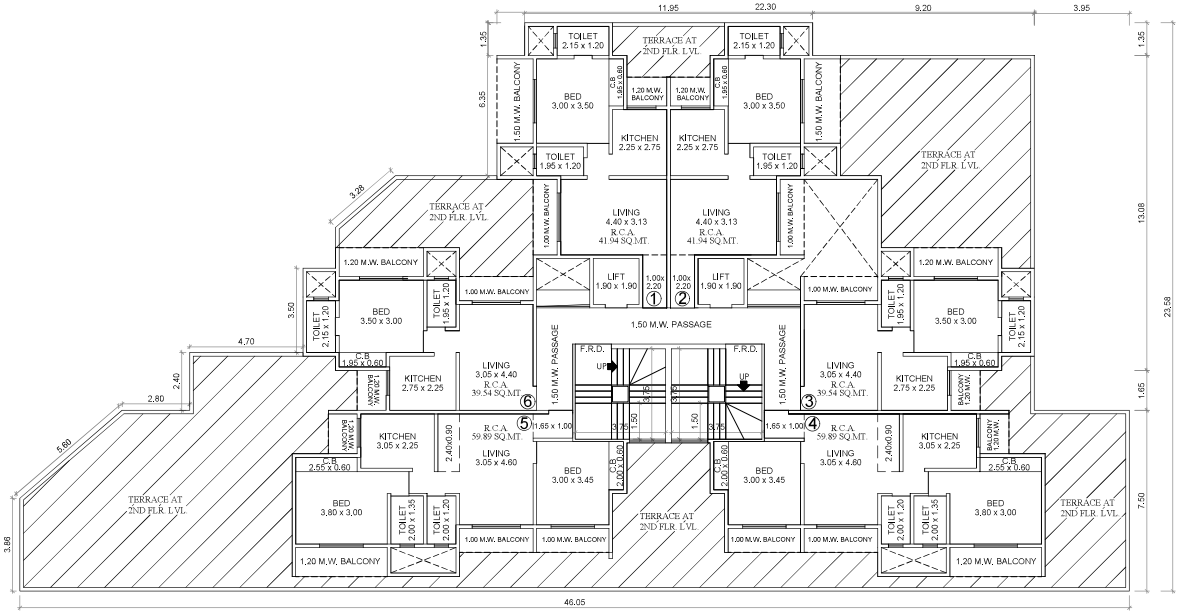

SECOND FLOOR PLAN

WING A SCALE- 1:100

BUILT UP AREA CALCULATION FOR 2ND FLOOR WING A			
AREA NAME	LENGTH	WIDTH	Area(Sq.M)
BLOCK	31.25	22.98	443.28
			BLOCK AREA TOTAL =443.28Sq.M
Void8	-	-	0.42
Void7	-	-	0.42
LiftWell8	-	-	3.61
LiftWell7	-	-	3.60
			TOTAL Deduction =8.05Sq.M
			Net BuiltUp Area =435.23 Sq.M

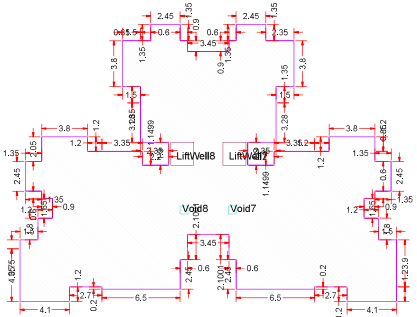

BUILT-UP AREA CALCULATION 2ND FLOOR WING A

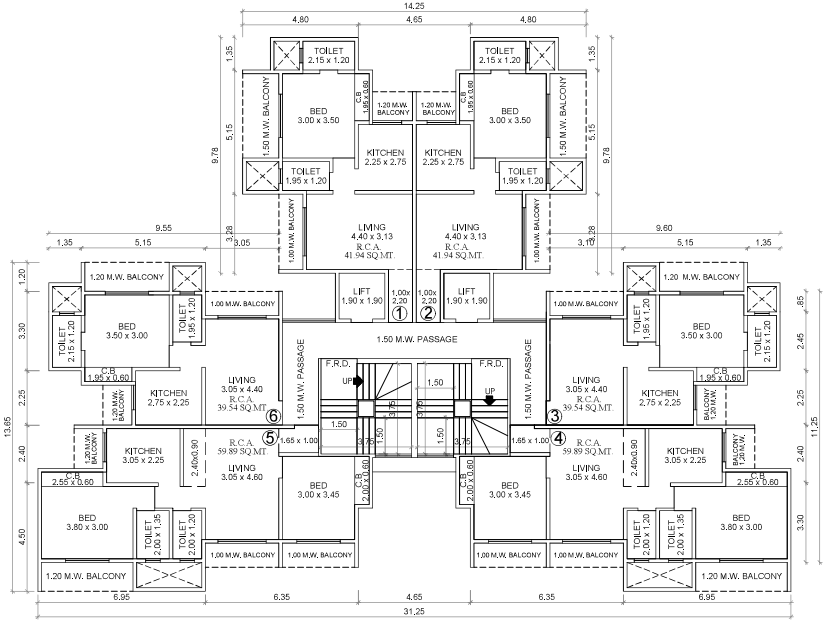

TYPICAL FLOOR PLAN

(3RD TO 7TH,9TH TO 12TH,14TH TO 17TH)

WING A SCALE- 1:100

BUILT UP AREA CALCULATION FOR TYPICAL FLOOR 3RD TO 7TH 9TH TO 12TH 14TH TO 17TH WING A			
AREA NAME	LENGTH	WIDTH	Area(Sq.M)
BLOCK	31.25	22.98	443.28
			BLOCK AREA TOTAL =443.28Sq.M
Void6	-	-	0.42
Void5	-	-	0.42
LiftWell6	-	-	3.61
LiftWell5	-	-	3.60
			TOTAL Deduction =8.05Sq.M
			Net BuiltUp Area =435.23 Sq.M

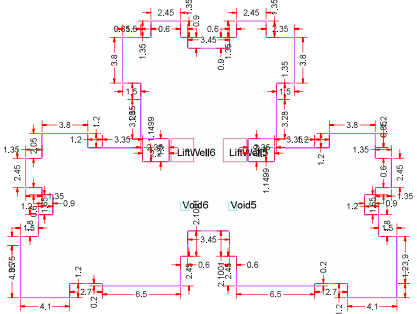

BUILT-UP AREA CALCULATION TYPICAL FLOOR 3RD TO 7TH 9TH TO 12TH 14TH TO 17TH WING A

Signature valid

Digitally signed by PURUSHOTTAM MANOHARRAO SHINDE
Date: 2024.02.28 17:43:35 IST
Reason: Approved Drawing Plan
Location: Mira Bhayandar Municipal Corporation
Project Code : MBMC-24-08674
Application Number : MBMC24-08674-00013
Proposal Number : 241003
Certificate Number : MBMC/B/2024/APL/00183

Jointed Director Town Planning
Date: 13/02/2024

Name Of : Owner Niket Khushal Rambhia

Postal Address : 2504 ICC TOWER TWO,G D AMBEKAR MARG, NEAR WADAL TELEPHONE EXCHANGE,Dadar,Mumbai,Mumbai City-400014,Maharashtra
Phone No.-9821615128

DESCRIPTION OF PROJECT :

Type of Proposal : Mixed
BUILDING ON CTS, NO./SURVEY NO.- 138

SITE ADDRESS :
□ □ □ (OLD) SURVEY NO. 462/4, 7; (NEW) SURVEY NO. 138/4, 7; VILLAGE NAVGHAR, TAL. AND DIST- THANE.

Name Of Engineer : BASAVARAJ GADEKAR

LOGO: Tej's Consultants

ADDRESS OF OFFICE
OFFICE -
1002 NAKSHATRA TOWER, 10TH FLR , BEHIND, BALAJI HOSP, GOLDEN NEST CIRCLE ,MIRA ROAD (EAST),DIST- THA

OWNERS SIGN -
Verified by applicant

TECHNICAL PERSON SIGN
Signature valid
Digitally signed by PURUSHOTTAM MANOHARRAO SHINDE
Date: 2024.02.28 17:43:35 IST
Reason: Approved Drawing Plan
Location: Mira Bhayandar Municipal Corporation

03	SCALE- 1:100	Date: 27/01/24
	JOB NO - MBMC-24-08674	CHECK BY --

SUBMISSION DRAWING