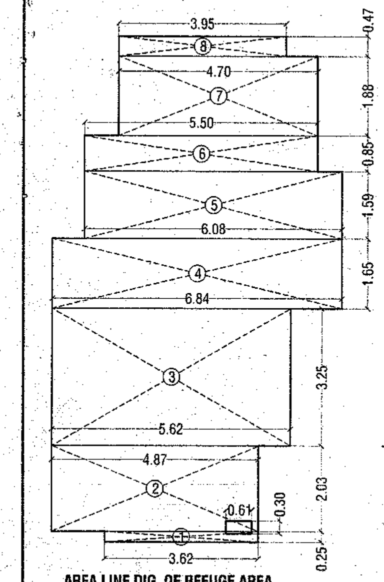

**AREA LINE DIG. OF REFUGE AREA 6TH , 11TH 17TH & 23RD**
SCALE 1:100

**REFUGE AREA CALCULATION OF 6TH,11TH 17TH & 23RD FLOOR PLAN**

REFUGE AREA CALCULATION

| | | | | | |
|---|---|---|---|---|---|
| 1 | 3.62 | X | 0.25 | = | 0.91 |
| 2 | 4.87 | X | 2.03 | = | 9.89 |
| 3 | 5.62 | X | 3.25 | = | 18.27 |
| 4 | 6.84 | X | 1.65 | = | 11.29 |
| 5 | 6.08 | X | 1.59 | = | 9.67 |
| 6 | 5.50 | X | 0.85 | = | 4.68 |
| 7 | 4.70 | X | 1.88 | = | 8.37 |
| 8 | 0.47 | X | 3.95 | = | 1.86 |
| TOTAL AREA | | | | = | 64.94 SQ.M. |
| DEDUCTION | | | | | |
| D1 | 0.30 | X | 0.60 | = | 0.18 |
| TOTAL | | | | = | 0.18 |
| TOTAL REFUGE AREA (64.94-0.18) | | | | = | 64.76 SQ.M. |
| AREA AS PER POLYLINE | | | | = | 65.19 SQ.M. |

| REFUGE AREA REQUIRED ON 6TH FLOOR : | |
|---|---|
| FLOOR | B.UP. AREA |
| 6TH (REFUGE) | 508.64 |
| 7TH | 573.83 |
| TOTAL | 1082.47 SQ.M. |
| 1082.47 / 12.50 = 86.60 PERSONS | |
| PER PERSON 0.30 SQ.M. | |
| 86.60 X 0.30 SQ.MT. = 25.98 SQ.M. | |
| REQUIRED REFUGE AREA = 25.98 SQ.M. | |
| PROPOSED REFUGE AREA = 65.19 SQ.M. | |
| PERMISSIBLE 100% EXCESS REFUGE = 25.98 X 2 = 51.96 SQ.M. | |
| EXCESS REFUGE AREA = 13.23 SQ.M. | |

| REFUGE AREA REQUIRED ON 17TH FLOOR : | |
|---|---|
| FLOOR | B.UP. AREA |
| 17TH (REFUGE) | 508.64 |
| 18TH | 573.83 |
| TOTAL | 1082.47 SQ.M. |
| 1082.47 / 12.50 = 86.60 PERSONS | |
| PER PERSON 0.30 SQ.M. | |
| 86.60 X 0.30 SQ.MT. = 25.98 SQ.M. | |
| REQUIRED REFUGE AREA = 25.98 SQ.M. | |
| PROPOSED REFUGE AREA = 65.19 SQ.M. | |
| PERMISSIBLE 100% EXCESS REFUGE = 25.98 X 2 = 51.96 SQ.M. | |
| EXCESS REFUGE AREA = 13.23 SQ.M. | |

| REFUGE AREA REQUIRED ON 11TH FLOOR : | |
|---|---|
| FLOOR | B.UP. AREA |
| 11TH (REFUGE) | 508.64 |
| 12TH | 573.83 |
| TOTAL | 1082.47 SQ.M. |
| 1082.47 / 12.50 = 86.60 PERSONS | |
| PER PERSON 0.30 SQ.M. | |
| 86.60 X 0.30 SQ.MT. = 25.98 SQ.M. | |
| REQUIRED REFUGE AREA = 25.98 SQ.M. | |
| PROPOSED REFUGE AREA = 65.19 SQ.M. | |
| PERMISSIBLE 100% EXCESS REFUGE = 25.98 X 2 = 51.96 SQ.M. | |
| EXCESS REFUGE AREA = 13.23 SQ.M. | |

| REFUGE AREA REQUIRED ON 23RD FLOOR : | |
|---|---|
| FLOOR | B.UP. AREA |
| 23RD (REFUGE) | 508.64 |
| 24TH | 573.83 |
| TOTAL | 1082.47 SQ.M. |
| 1082.47 / 12.50 = 86.60 PERSONS | |
| PER PERSON 0.30 SQ.M. | |
| 86.60 X 0.30 SQ.MT. = 25.98 SQ.M. | |
| REQUIRED REFUGE AREA = 25.98 SQ.M. | |
| PROPOSED REFUGE AREA = 65.19 SQ.M. | |
| PERMISSIBLE 100% EXCESS REFUGE = 25.98 X 2 = 51.96 SQ.M. | |
| EXCESS REFUGE AREA = 13.23 SQ.M. | |

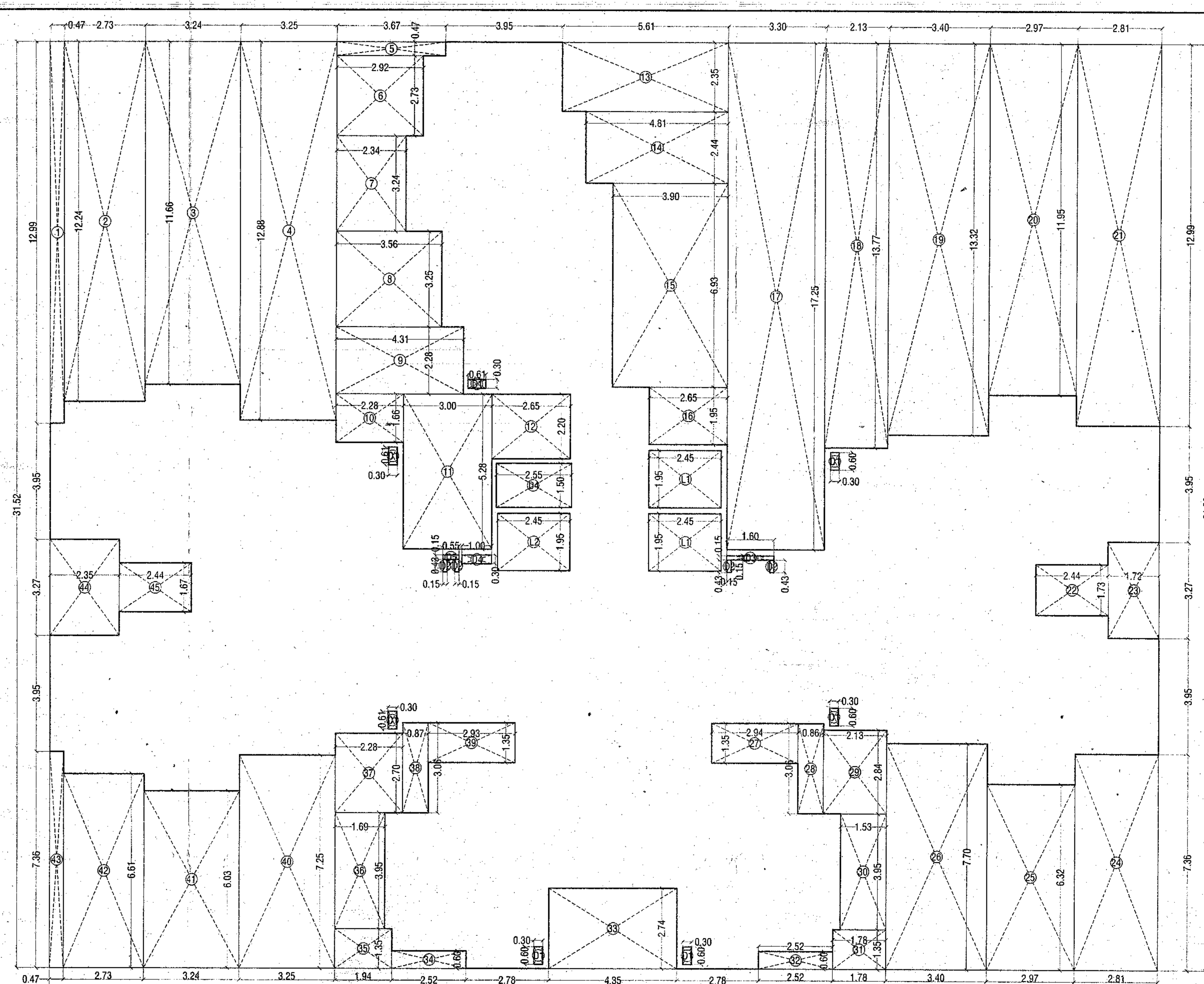

**AREA LINE DIG. OF 6TH, 11TH,17TH & 23RD (REFUGE) FLOOR**
SCALE 1:100

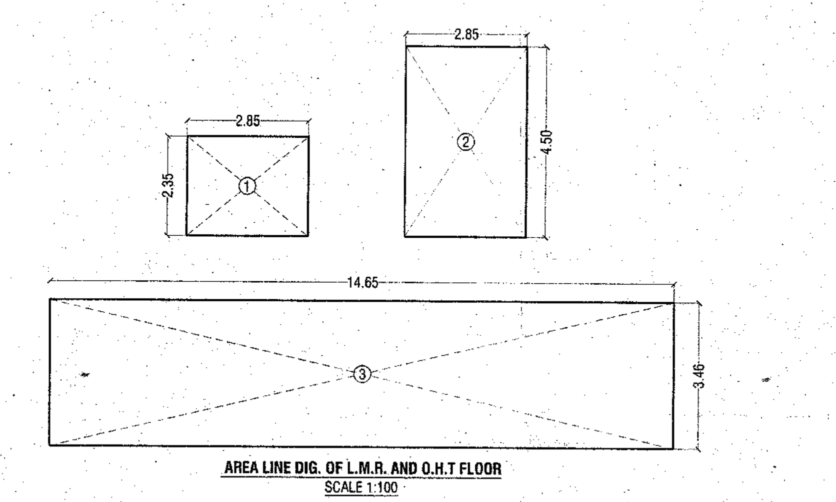

**AREA LINE DIG. OF L.M.R. AND O.H.T FLOOR**
SCALE 1:100

| AREA CALCULATION OF L.M.R. AND O.H.T. FLOOR : | | | | | |
|---|---|---|---|---|---|
| 1. | 2.85 | X | 2.35 | = | 6.70 |
| 2. | 2.85 | X | 4.50 | = | 12.83 |
| 3. | 14.65 | X | 3.46 | = | 50.69 |
| TOTAL AREA | | | | = | 70.22 SQ.M. |
| AS PER POLY LINE | | | | = | 70.21 SQ.M. |

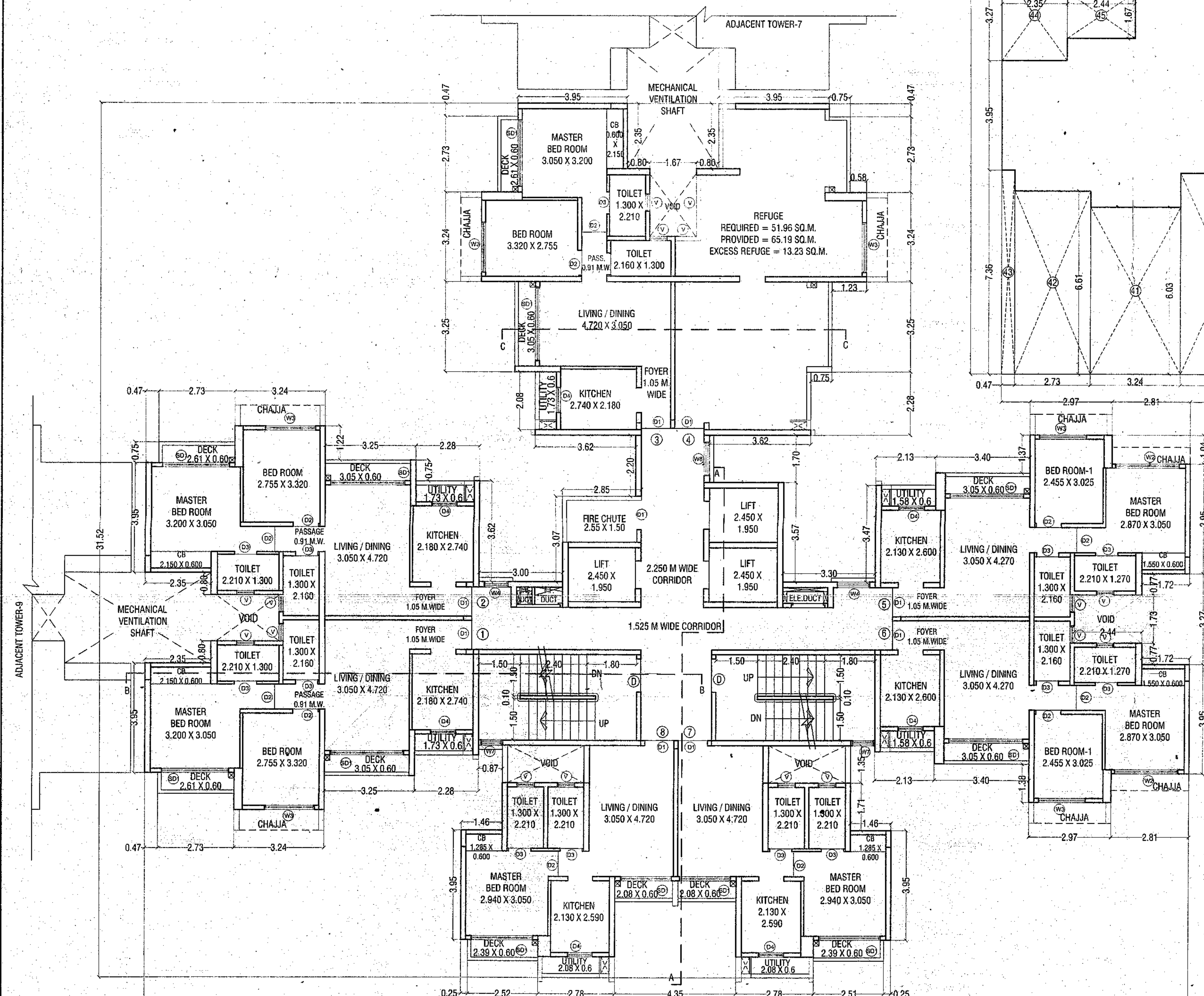


**REFUGE FLOOR (6TH, 11TH, 17TH & 23RD FLOOR )**
SCALE 1:100

**BUILT UP AREA CALCULATION OF 6TH,11TH,17TH & 23RD REFUGE FLOOR PLAN**

| | | | | | |
|---|---|---|---|---|---|
| BLOCK 'A' | 37.53 | X | 31.52 | = | 1182.95 |
| TOTAL ADDITION | | | | = | 1182.95 SQ.M. |
| DEDUCTION | | | | | |
| 1 | 0.47 | X | 12.99 | = | 6.11 |
| 2 | 2.73 | X | 12.24 | = | 33.42 |
| 3 | 3.24 | X | 11.66 | = | 37.78 |
| 4 | 3.25 | X | 12.88 | = | 41.86 |
| 5 | 3.67 | X | 0.47 | = | 1.72 |
| 6 | 2.92 | X | 2.73 | = | 7.97 |
| 7 | 2.34 | X | 3.24 | = | 7.58 |
| 8 | 3.56 | X | 3.25 | = | 11.57 |
| 9 | 4.31 | X | 2.28 | = | 9.83 |
| 10 | 2.28 | X | 1.66 | = | 3.78 |
| 11 | 3.00 | X | 5.28 | = | 15.84 |
| 12 | 2.65 | X | 2.20 | = | 5.83 |
| 13 | 5.61 | X | 2.35 | = | 13.18 |
| 14 | 4.81 | X | 2.44 | = | 11.74 |
| 15 | 3.90 | X | 6.93 | = | 27.03 |
| 16 | 2.65 | X | 1.95 | = | 5.17 |
| 17 | 3.30 | X | 17.25 | = | 56.93 |
| 18 | 2.13 | X | 13.77 | = | 29.33 |
| 19 | 3.40 | X | 13.32 | = | 45.29 |
| 20 | 2.97 | X | 11.95 | = | 35.49 |
| 21 | 2.81 | X | 12.99 | = | 36.50 |
| 22 | 2.44 | X | 1.73 | = | 4.22 |
| 23 | 1.72 | X | 3.27 | = | 5.62 |
| 24 | 2.81 | X | 7.36 | = | 20.68 |
| 25 | 2.97 | X | 6.32 | = | 18.77 |
| 26 | 3.40 | X | 7.70 | = | 26.18 |
| 27 | 2.94 | X | 1.35 | = | 3.97 |
| 28 | 0.86 | X | 3.06 | = | 2.63 |
| 29 | 2.13 | X | 2.84 | = | 6.05 |
| 30 | 1.53 | X | 3.95 | = | 6.04 |
| 31 | 1.78 | X | 1.35 | = | 2.40 |
| 32 | 2.52 | X | 0.60 | = | 1.51 |
| 33 | 4.35 | X | 2.74 | = | 11.92 |
| 34 | 2.52 | X | 0.60 | = | 1.51 |
| 35 | 1.94 | X | 1.35 | = | 2.62 |
| 36 | 1.69 | X | 3.95 | = | 6.68 |
| 37 | 2.28 | X | 2.70 | = | 6.52 |
| 38 | 0.87 | X | 3.06 | = | 2.66 |
| 39 | 2.93 | X | 1.35 | = | 3.96 |
| 40 | 3.25 | X | 7.25 | = | 23.56 |
| 41 | 3.24 | X | 6.03 | = | 19.54 |
| 42 | 2.73 | X | 6.61 | = | 18.05 |
| 43 | 0.47 | X | 7.36 | = | 3.46 |
| 44 | 2.35 | X | 3.27 | = | 7.68 |
| 45 | 2.44 | X | 1.67 | = | 4.07 |

| | | | | | | |
|---|---|---|---|---|---|---|
| L1 | 2.45 | X | 1.95 | X 2 | = | 9.56 |
| L2 | 2.45 | X | 1.95 | | = | 4.78 |
| D1 | 0.30 | X | 0.60 | X 7 | = | 1.26 |
| D2 | 0.43 | X | 0.15 | X 4 | = | 0.36 |
| D3 | 1.60 | X | 0.15 | | = | 0.24 |
| D4 | 1.00 | X | 0.15 | | = | 0.15 |
| D5 | 0.55 | X | 0.15 | | = | 0.08 |
| D6 | 2.55 | X | 1.50 | | = | 3.83 |
| TOTAL AREA | | | | | = | 674.51 SQ.M. |
| BUILT UP AREA OF REFUGE FLOOR (1182.95 - 674.51) | | | | | = | 508.44 SQ.M. |
| AREA AS PER POLYLINE | | | | | = | 508.64 SQ.M. |

EXCESS REFUGE AREA = 13.23 SQ.M.
TOTAL BUILT UP AREA OF REFUGE FLOOR :
= 508.64 + 13.23 = 521.87 SQ.M.

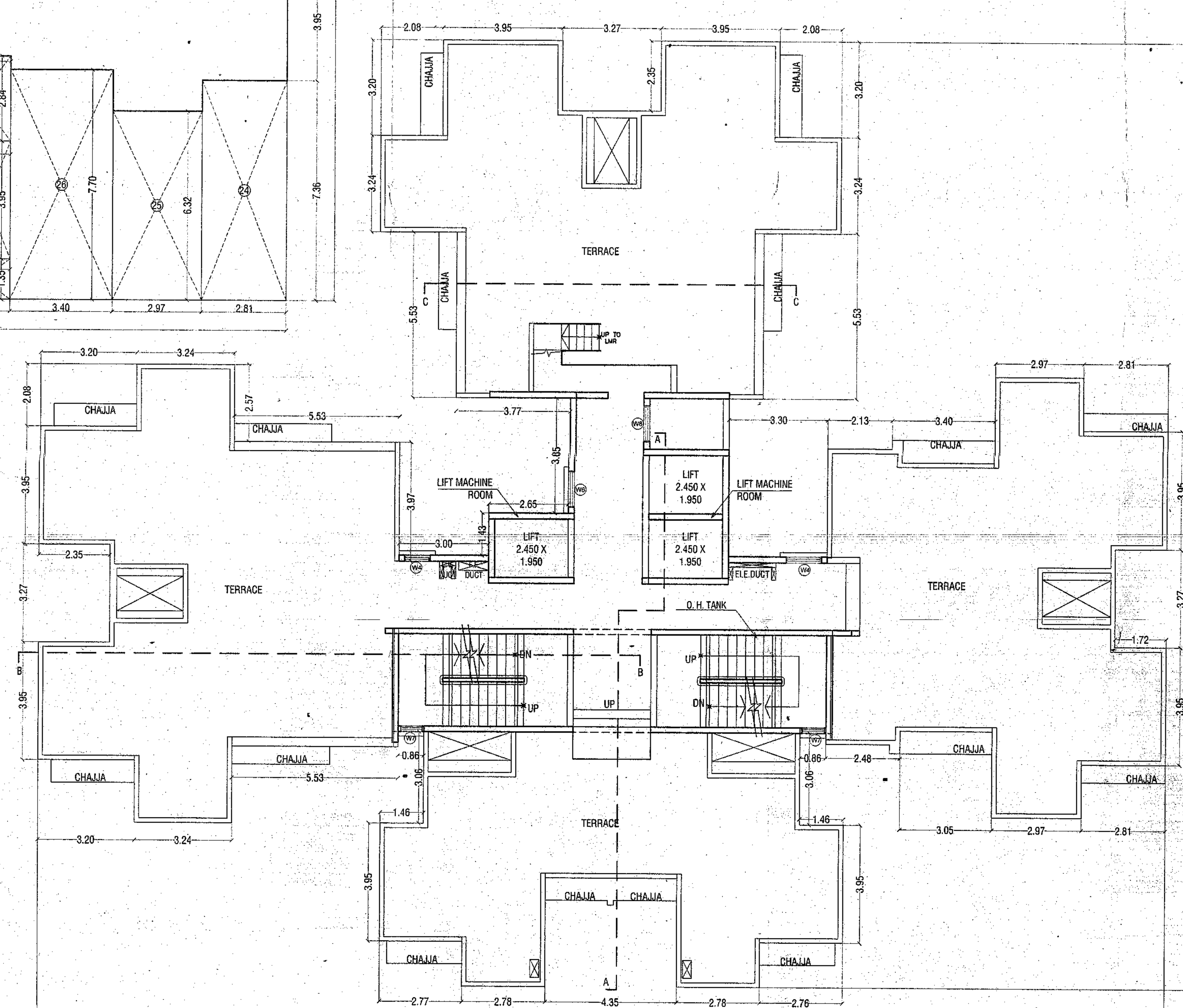


**TERRACE FLOOR PLAN**
SCALE 1:100

## CLUSTER - 5 TOWER - 8

23/32

**(LOWER GROUND /PODIUM PT + GROUND /PODIUM PT LVL+UPPER GROUND / PODIUM PT + STILT/LOBBY LVL.+1ST TO 25TH FLOOR)**

CONTENTS OF SHEET

REFUGE FLOOR PLAN, WITH AREA LINE DIAGRAM & CALCULATION, TERRACE FLOOR PLAN, ETC.

STAMP OF APPROVAL OF PLAN

PLANS APPROVED 32 NOS OF DRAWINGS) WHICH ARE TO BE READ ALONG WITH BUILDING PERMISSION & COMMENCEMENT CERTIFICATE/AMENDED BUILDING PERMISSION & COMMENCEMENT CERTIFICATE BEARING - NO. SRO1 / Growth Centre / 1201 / BP / ITP - Usarghar & Sandap - 01 / Vol-1 / 1201 / 2021

DATE : 22 / 11 / 2021

AND THE CONDITIONS MENTIONED THEREIN.

Planner, (Al) Sub-Regional Office, Thane MMRDA

MMRDA

SCHEDULE OF DOOR & WINDOW

| S.NO. | TYPE DOOR & WINDOW | OPENING SIZE | DESCRIPTION |
|---|---|---|---|
| 1 | D | 1.20 x 2.25 | SINGLE SHUTTER FIRE RATED FLUSH DOOR |
| 2 | D1 | 1.05 x 2.25 | SINGLE SHUTTER FIRE RATED FLUSH DOOR |
| 3 | D2 | 0.91 x 2.25 | SINGLE SHUTTER FLUSH DOOR |
| 4 | D3 | 0.80 x 2.25 | SINGLE SHUTTER FLUSH DOOR |
| 5 | W1 | 2.65 x 2.25 | 3 PANEL SLIDING ALLUMINIUM WINDOW |
| 6 | W2 | 2.40 x 2.25 | 3 PANEL SLIDING ALLUMINIUM WINDOW |
| 7 | W3 | 1.80 x 2.25 | 3 PANEL SLIDING ALLUMINIUM WINDOW |
| 8 | W4 | 0.90 x 2.25 | 3 PANEL SLIDING ALLUMINIUM WINDOW |
| 9 | W5 | 2.20 x 2.25 | 2 PANEL SLIDING WINDOW / PART FIXED |
| 10 | W6 | 1.83 x 1.45 | 2 PANEL SLIDING WINDOW / PART FIXED |
| 11 | W7 | 0.72 x 1.20 | 2 PANEL SLIDING ALLUMINIUM WINDOW |
| 12 | W8 | 1.20 x 1.20 | 2 PANEL SLIDING ALLUMINIUM WINDOW |
| 13 | V | 0.60 x 1.05 | LOUVERED VENTILATOR |

**DESCRIPTION OF PROPOSAL**

PROPOSED **INTEGRATED TOWNSHIP PROJECT** ON PLOT BEARING VILLAGE - USARGHAR BEARING S. NO. 17/1,17/2, 17/3/A, 17/3/B, 17/4, 17/5, 19/1, 19/2, 19/3, 19/4, 20/3, 20/4, 20/5, 34/1, 36/1/A, 36/1/B, 37/1, 37/2, 38/1, 38/2, 38/3, 38/4, 70/9, 70/10, 70/11, 71/1, 71/2, 71/3, 71/4, 71/8, 91/1, 91/2, 91/3, 91/4, 91/5, 92/1, 92/2, 93/P, 103/2, 103/3, 103/4, 103/5, 103/6/A, 103/6/B, 103/7, 103/8, 103/9, 103/10, 103/11,103/12,103/13,103/14/B, 103/15, 103/16, 103/17, 103/18, 106/2, 106/3, 107/1, 107/2/A, 107/2/B, 107/3, 107/4, 107/5, 107/6, 107/7, 107/8, 107/9, 107/10, 107/11, 107/12, 107/13, 107/14, 107/15, 107/16, 107/17, 107/18, 107/19, 107/20, 107/22, 107/23, 107/24, 107/25A, 107/25B, 107/26A, 107/26B, 108/1, 108/2, 108 /3, 109P, 134/1, 134/2,134/3 DIST- THANE AND VILLAGE SANDAP BEARING S. NO. 2 - 21/1 - DIST- THANE

**NAME AND ADDRESS OF / P.O.A.H.**


M/S. HORIZON PROJECTS PVT. LTD.
RUNWAL GROUP, RUNWAL & OMKAR ESQUARE,
5TH FLOOR, OPP.SION CHUNABHATTI SIGNAL,
SION (EAST) MUMBAI - 400022.


M/s. HORIZON PROJECTS PVT. LTD.
Authorised Signatory

SIGNATURE OF OWNER / P.O.A.H. | SIGNATURE OF ARCHITECT

**ARCHITECTS**


Saakaar ARCHITECTS
2ND FLOOR, NAKSHATRA, A WING,
NEAR TMC, ALMEIDA ROAD,
PANCHPAKHADI, THANE (W). 400 602
PHONE - 2537 8701,TELEFAX - 2536 4700
E MAIL - saakaararchitects@yahoo.co.in


| DRG.NO. | SCALE | DATE | DRN.BY | CHKD.BY |
|---|---|---|---|---|
| C-669/2021/A-M/23 | 1 : 100 | 18/01/2021 | NIVRUTTI | DHANASHREE |

\\SERVER\Saakaar12\Cad Drawings\RUNWAL USARGHAR - MY CITY\2. MUNICIPAL\26. Cluster -4- 9- UDCPR- AS SUBMITTED\8. Cluster 5 - TOWER 8.dwg