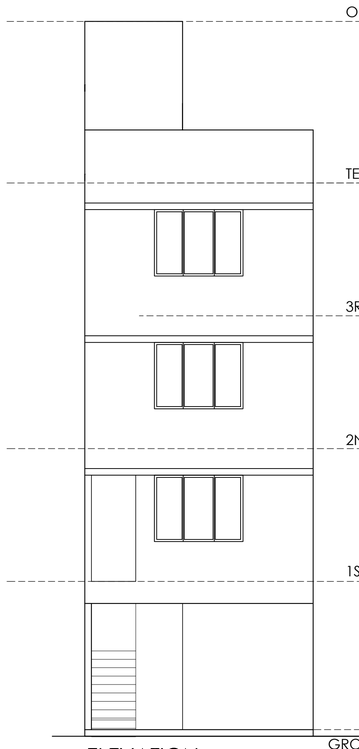

ELEVATION
(SCALE - 1: 100)

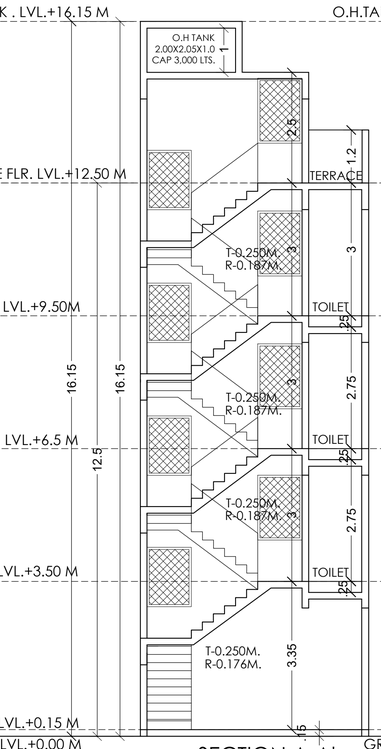

SECTION A-A'
(SCALE - 1: 100)

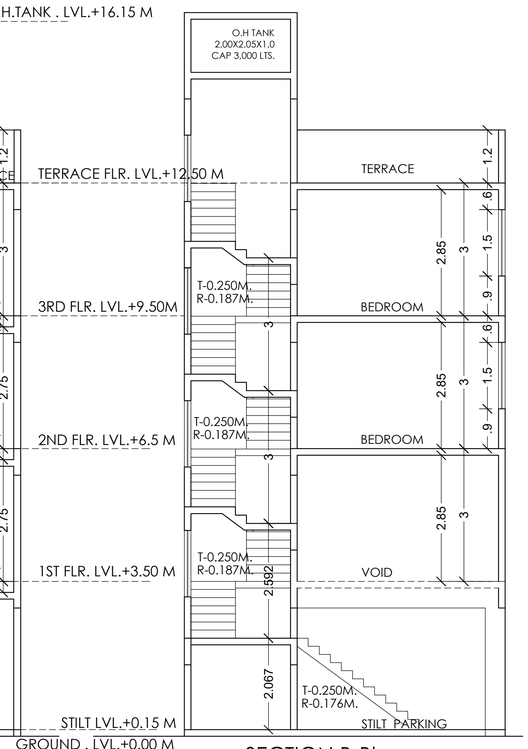

SECTION B-B'
(SCALE - 1: 100)

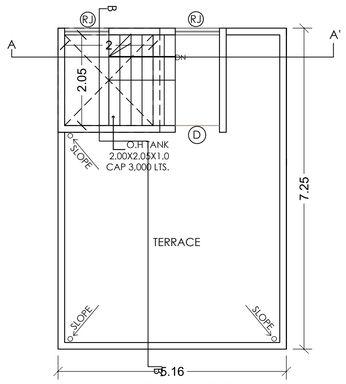

TERRACE FLOOR PLAN
(SCALE - 1: 100)

TABLE NO. 8 - PARKING REQUIREMENTS FOR MULTY FAMILY RESIDENTIAL WITH COMMERCIAL AREA

As per notifivation , dtd 28.12.2022

SR. NO.	REQUIRED PARKING RATE	TOTAL NO.OF FLAT	PARKING SPACE REQ. NON CONGESTED AREA CAR	PARKING SPACE REQ. NON CONGESTED AREA SCOOTER	PARKING SPACE PROP. NON CONGESTED AREA CAR	PARKING SPACE PROP. NON CONGESTED AREA SCOOTER
1	For every tenement having carpet area 150 sq.mt. AND ABOVE	0.00	2.00	1.00	0.00	0.00
2	For every tenement having carpet area equal to or above 80 sq.mt. but less than 150 sq.mt.	0.00	1.00	1.00	0.00	0.00
3	For every two tenement with each tenement having carpet area equal to or above 40 sq.m. but less than 80 sq.m.	1.00	1.00	2.00	1.00	1.00
4	For every two tenement with each tenement having carpet area less than 40 sq.m. but more than 30 sq.m.	0.00	1.00	2.00	0.00	0.00
5	For every two tenement with each tenement having carpet area less than 30 sq.mt.	0.00	0.00	2.00	0.00	0.00
6	For every 100 sq.m. carpet area or fraction there of	0.00	2.00	6.00	0.00	0.00
Parking Requirement (quantum)	Residential				1	1
	Commercial				0	0
5% visitor parking only for residential					0	0
TOTAL					1	1
With Multiplying Factor on total parking as per Table BC - 0.4			Multiplying Factor Not applicable for scooter parking		1	1

PARKING REQUIREMENT	CAR	SCOOTER
COMPOSITE PARKING ONE CAR WITH TWO SCOOTERS MAY BE ALLOWED.	0	0
SIX SCOOTERS PARKING MAY BE ALLOWED TO BE CONVERTED IN ONE CAR PA	0	0
Required PARKING (after conversion)	1	1
Proposed parking considering additional FSI	1	1

WATER CAPACITY REQUIRED FOR RESIDENTIAL U.G. WATER TANK

BUILDING	FLAT NOS.	REQUIRED DOMESTIC 135 LTRS.	TOTAL DOM. LTRS. (A)	REQUIRED FLUSHING 270 LTRS.		ADDITIONAL TOILET 180 LTR. PER SIT		TOTAL FLUSHING LTRS. (B)	TOTAL LITERS (RES.) (A + B)
RESIDENTIAL	01	135 X 01 X 5	675	270 X 01	270	0.00	0.000	0.000	945

OVER HEAD WATER TANK CAPACITY CALCULATION

TANK TYPE	BUILDING NUMBER	WATER REQUIRED (LTRS.) (60% OF UNDER GROUND TANK)	COLD WATER REQUIREMENT		
			TANK SIZE	NUMBER OF TANK	CAPACITY (LTRS.)
DOMESTIC		567	(2.00 X 2.05 X 1.00)	01	3,000
COMMERCIAL	BUILDING-1	0.000		01	0.000
FIRE		0.000		01	0.000
			TOTAL	03	3,000 LTRS.

PROVIDED U.G. WATER TANK

DOMESTIC TANK (RESIDENTIAL)	4,800
DOMESTIC TANK (COMMERCIAL)	0
FIRE TANK	0.00
TOTAL PROVIDED WATER TANK CAPACITY	4,800 LTRS.

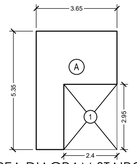

AREA DIAGRAM STAIRCASE
(SCALE 1:200)

STAIRCASE AREA (GROUND FLOOR)				
A	3.65 X 5.35	=	19.53	SQ.MT.
1	2.40 X 2.95	=	7.08	SQ.MT.
TOTAL DEDUCTION (A -1)		=	7.08	SQ.MT.
TOTAL BUILT UP AREA (19.53 - 7.08)		=	12.45	SQ.MT.

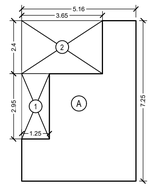

AREA DIAGRAM STILT
(SCALE 1:200)

STILT AREA (GROUND FLOOR)				
A	5.16 X 7.25	=	37.41	SQ.MT.
1	1.25 X 2.95	=	3.69	SQ.MT.
2	3.65 X 2.40	=	8.76	SQ.MT.
TOTAL DEDUCTION (A - (1+2))		=	12.45	SQ.MT.
TOTAL BUILT UP AREA (37.41 - 12.45)		=	24.96	SQ.MT.

2ND TO 3RD BUILT UP AREA CALCULATION

A	5.16	X	7.25	=	37.41 SQ.MT.
TOTAL				=	37.41 SQ.MT.

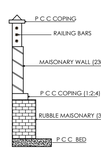

COMPOUND WALL
(SCALE - NTS)

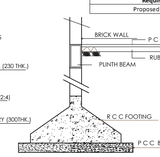

ISOLATED FOOTING
(SCALE - NTS)

1ST FLOOR BUILT UP AREA CALCULATION

A	5.16	X	7.25	=	37.41 SQ.MT.
1	1.00	X	4.75	=	4.75 SQ.MT.
TOTAL DEDUCTION (A-1)				=	4.75 SQ.MT.
TOTAL BUILT UP AREA (37.41 - 4.75)				=	32.66 SQ.MT.

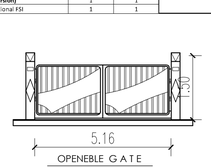

OPENEBLE G A T E
(SCALE - NTS)

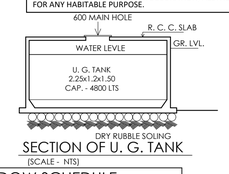

SECTION OF U. G. TANK
(SCALE - NTS)

Proforma-1

Sr.No		Perticular	Area (sq.m)
1		**Area of plot (Minimum area of a, b, c to be considered)**	
	a	As per ownership document (7/12, CTS extract)	60.110
	b	as per measurement sheet	60.110
	c	as per site	60.110
2		**Deductions for**	
	a	Proposed D.P./ D.P. Road widening Area/Service Road / Highway widening	0.000
	b	Any D.P. Reservation area	0.000
		(Total a+b)	0.000
3		**Balance area of plot (1-2)**	60.110
4		Amenity Space (if applicable)	0.000
	a	Required -	0.000
	b	Adjustment of 2(b), if any -	0.000
	c	Balance Proposed -	0.000
5		**Net Plot Area (3-4 (c))**	60.110
6		**Recreational Open space (if applicable)**	0.000
	a	Required -	0.000
	b	Proposed -	0.000
7		Internal Road area	0.000
8		**Plotable area (if applicable)**	0.000
9		Built up area with reference to Basic F.S.I. as per front road width (Sr. No. 5xbasic FSI) - 1.0 per UDCPR	60.110
10		**Addition of FSI on payment of premium**	
	a	Plus Additional FSI as per Note 3 of 10.10.1 (plot area *0.1)	
	b	Maximum permissible premium FSI - based on road width / TOD Zone. (plot area *0.3 premium FSI	19.840
	c	Proposed FSI on payment	19.840
11		**In-situ FSI / TDR loading**	
	a	In-situ area against D.P. road [2.0 x Sr. No. 2 (a)],if any	
	b	In-situ area against Amenity Space if handed over[2.00 or1.85 x Sr. No. 4 (b)and /or(c)],	
	c	TDR area-	
	d	Total in-situ / TDR loading proposed (11 (a)+(b)+(c))	0.000
12		**Additional FSI area under Chapter No. 7**	0.000
13		**Total entitlement of FSI in the proposal**	
	a	[9 + 10(b)+11(d)] or 12 whichever is applicable.	79.950
	b	Permissible Ancillary Area FSI upto 60% or 80% ***on balance potential*** with payment of charges.	39.670
	c	***Proposed Ancillary area FSI***	27.530
	d	Total entitlement (a+b)	119.620
14		Maximum utilization limit of F.S.I. (building potential) Permissible as per Road width {(as per Regulation No. 6.1 or 6.2 or 6.3 or 6.4 as applicable) x 1.6 or 1.8), **read with Note 3 of 10.10.1**	0.000
15		**Total Built-up Area in proposal.(excluding area at Sr.No.17**	**107.480**
	a	Existing Built-up Area	0.000
	b	Proposed Built-up Area (as per 'P-line')	**107.480**
	c	Total (a+b)	107.480
16		F.S.I. Consumed (15/13) (should not be more than serial No.14 above.)	0.899
17		Area for Inclusive Housing, if any	
	a	Required (20% of Sr.No.5)	0.000
	b	Proposed	0.000
	a	Total commercal unit	0 NOS.
		Total residential unit	1 NOS.
		Basement , Stilt, Podium area	
	a	Stilt area	38.7
	b	1st Podium area	0
	c	Total area (a+b)	38.7
18		Height of building	12.50 M

NOTE:- THE PROPOSED CHAJJAS OVER OPENINGS FOR PROTECTION FROM SUN AND RAIN ARCHITECTURAL FEATURES FOR DECORATION, AESTHETIC PURPOSE SHALL NOT BE USED FOR ANY HABITABLE PURPOSE.

APPROVAL STAMP OF CIDCO

CARPET AREA STATEMENT

FLOOR	CARPET AREA (SQM.)
GR. FL.	NIL.
1st. FL.	20.116
2nd. FL.	25.167
3rd. FL.	25.167
TOTAL	70.450

FLOORS WISE AREA STATEMENT

FLOORS	NET	STAIRCASE	STILT	GROSS
GROUND	Nil	12.450	24.96	37.41
FIRST	32.66	—	—	32.66
SECOND	37.41	—	—	37.410
THIRD	37.41	—	—	37.410
TOTAL	107.48	12.450	24.96	144.89

DOORS & WINDOW SCHEDULE

TYPE	DIMMENTION	AREA	DESCRIPTION
D	1.0x2.10	2.100	T.W. PANNEL DOOR
D2	0.75x2.10	1.575	SINTEX DOOR
W	2.00x1.50	3.000	ALUM. SLIDING WIN
V	0.75x0.90	0.675	ALUM. LOUV WIN

LIGHT & VENTILATION STATEMENT

DESCRIPTION	C. AREA	1/10 REQD.	AREA PRO.	TYPE
M.P.ROOM	17.062	1.706	3.000	W
BEDROOM	22.113	2.211	3.000	W
TOILET	2.783	0.278	0.600	V

SANITARY REQUIRMENT

FLOORS	NO.OF W.C. REQ.	NO. W.C. PRO.
FIRST FL.	01	01
SECOND FL.	01	01
THIRD FL.	01	01

PROJECT

PROPOSED DEVELOPMENT OF RESIDENTIAL BUILDING ON PLOT NO. E-91 , SECTOR - 12 , KHARGHAR, NAVI MUMBAI.

NAME & SIGN. OF OWNER

MR. SHARAD UMAJI NALAWADE

NAME & SIGN. OF ARCHITECT

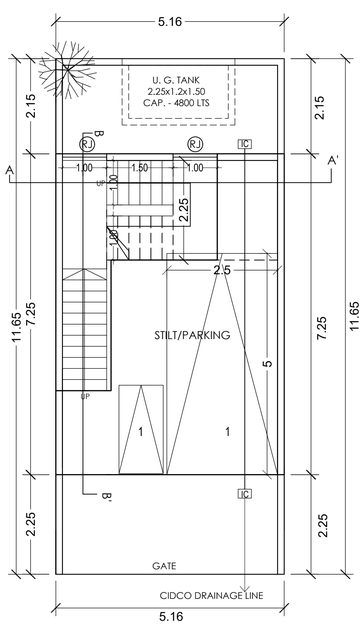

GROUND FLOOR PLAN
(SCALE - 1: 100)

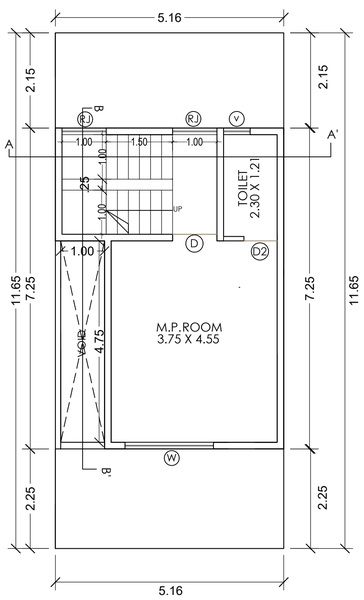

1 ST FLOOR PLAN
(SCALE - 1: 100)

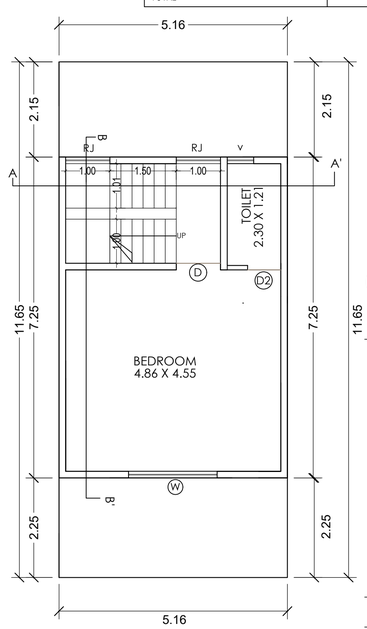

TYPICAL 2ND & 3RD FLOOR PLAN
(SCALE - 1: 100)

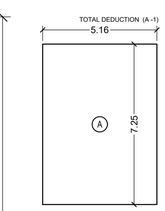

AREA DIAGRAM
(2ND TO 3RD. FLOOR)
(SCALE 1:200)

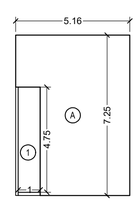

AREA DIAGRAM (1ST FLOOR)
(SCALE 1:200)

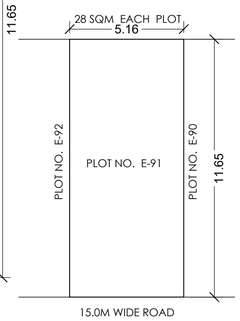

LOCATION PLAN
(SCALE - 1:200)

Certificate of Area:

Certificate that the plot under reference was surveyed by me on and the dimensions of sides etc. of plot stated on plan are as measured on site and the area so worked out tallies with the area stated in the document of Ownership/T.P Scheme/Land Records departement/City Survey records.

Ar. PRAVIN AHIRE
(Name of Architect/Licensed Engineer/Supervisor.)

Owner's Declaration:

I/We undersigned hereby confirm that I/We would abide by plans approved by Authority/Collector.I/We would execute the structure as per approved plans. Also I/We would execute the work under supervision of proper technical person so as to ensure the quality and safety at the work site.

Mr. SHARAD UMAJI NALAWADE
Owner (s) name and signature

SKYARCH
ARCHITECT AND INTERIOR DESIGNER
PLANNING & CONTRUCTION OF BUILDING
PLOT NO A- 81/31, SECTOR -12, KHARGHAR, NAVI MUMBAI.
AR. PRAVIN AHIRE REG. NO. - COA / 94/17704

JOB NO.	DRG.NO.	SCALE	DRAWN BY	CHECK BY	DATE
01	01	1:100	SANTOSH	SANTOSH	15/ 06/ 2023